5 PLUS PROMISE

5 SERVICES + 3 MOTs

5 YEARS' WARRANTY

5 YEARS' ROADSIDE ASSIST

The Amarok
Brochure

Commercial Vehicles

Vehicle shown may not reflect UK specification.

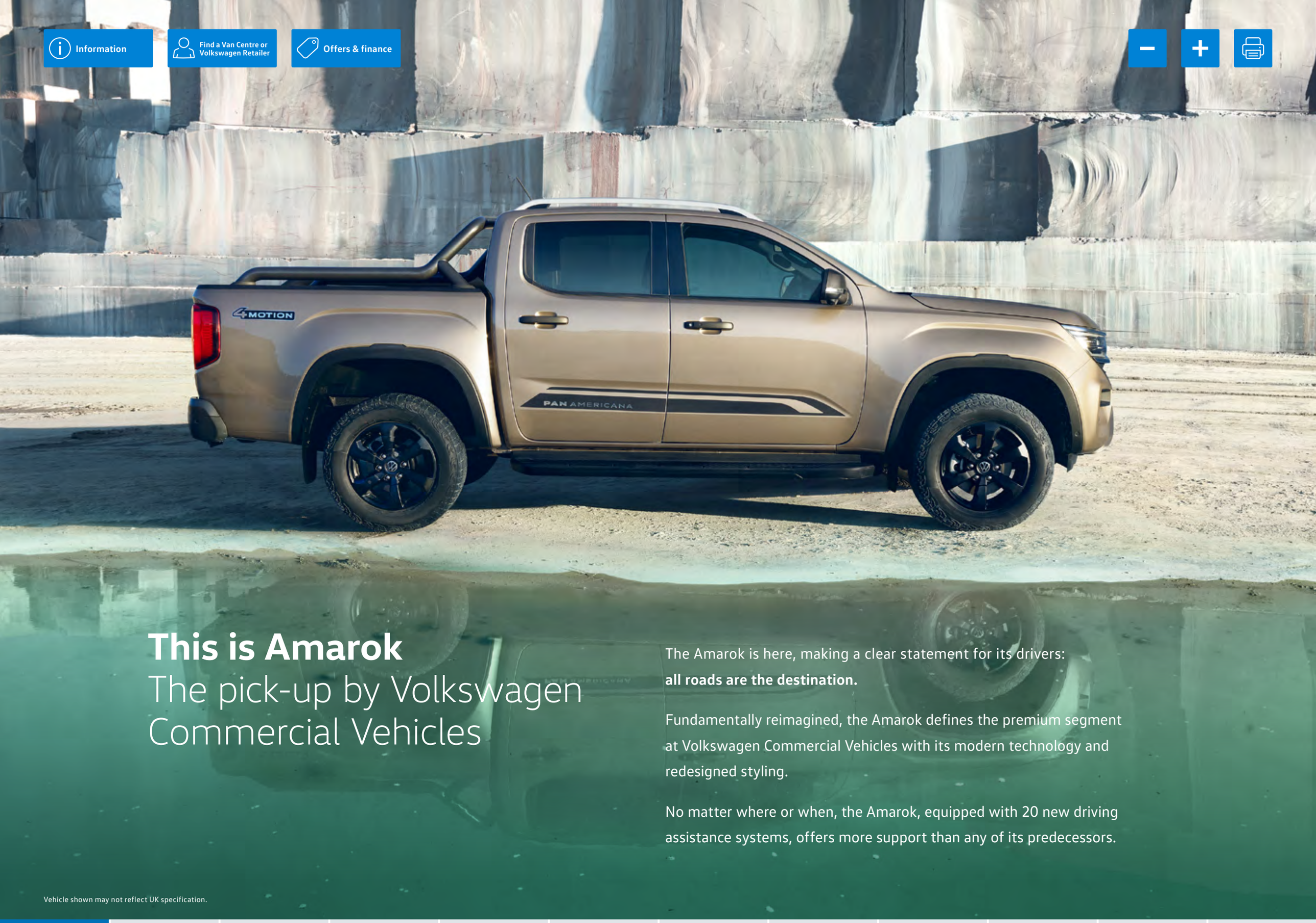

This is Amarok
The pick-up by Volkswagen Commercial Vehicles

The Amarok is here, making a clear statement for its drivers: **all roads are the destination.**

Fundamentally reimagined, the Amarok defines the premium segment at Volkswagen Commercial Vehicles with its modern technology and redesigned styling.

No matter where or when, the Amarok, equipped with 20 new driving assistance systems, offers more support than any of its predecessors.

Vehicle shown may not reflect UK specification.

This is **Versatility**

A new kind of multi-tool for every task

The Amarok masters every task you can throw at it, with a payload of up to 1,050 Kgs and a 3.5-tonne towing capacity. It also features new drive, assist and control systems, as well as a cargo box with more utility than ever. All this, coupled with the typical robustness of a pick-up, makes this second-generation Amarok the ideal ultra-modern multi-tool – wherever the road takes you.

Six different driving modes

The Amarok comes as standard with a 'Drive Mode Control' system. Depending on configuration, there are up to six drive modes: 'Eco', 'Normal', 'Mud/ruts', 'Sand', 'Slippery' and 'Load/trailer'. Depending on the mode selected, the steering power and steering behaviour, stability control and slip control, drive train response, gearbox control system and selectable all-wheel drive settings are all co-ordinated and optimised.

Vehicle shown may not reflect UK specification.

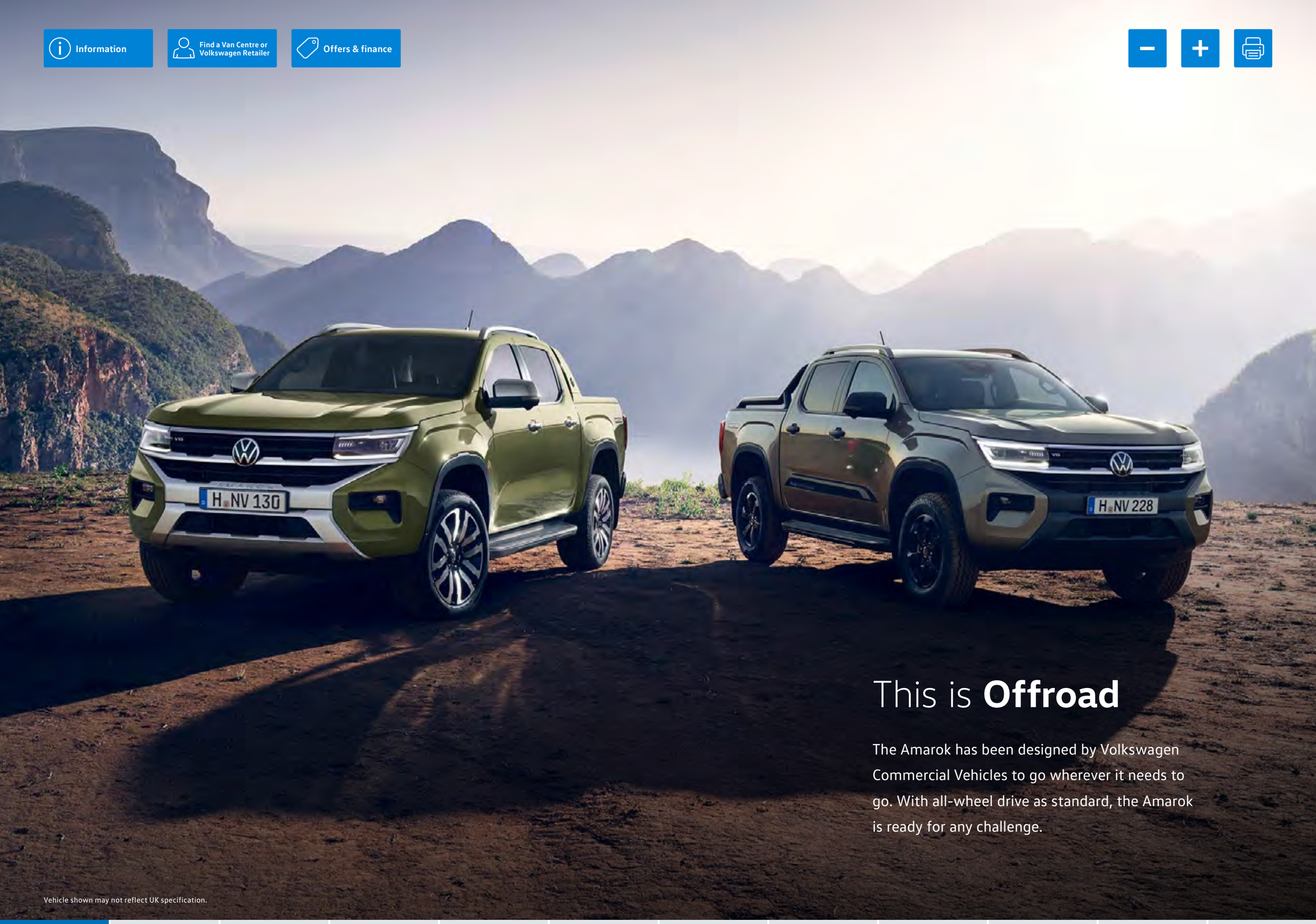

This is **Offroad**

The Amarok has been designed by Volkswagen Commercial Vehicles to go wherever it needs to go. With all-wheel drive as standard, the Amarok is ready for any challenge.

Vehicle shown may not reflect UK specification.

Vehicles shown may not reflect UK specification.

Longer wheelbase
The Amarok is 5,350mm long – 96mm longer than its predecessor. A wheelbase of 3,270mm corresponds to an increase of 173mm – which means there is more space in the crew cab. Since the wheelbase is now longer in proportion to the overall length, the body overhangs are reduced. This adds to an increased slope angle and a better off-road capability.

An adaptable transmission
The Amarok has the right answer for almost every driving situation. It also has the right transmission for almost every drive preference: from rear-wheel drive to selectable and permanent all-wheel drive. Three different diesels with four to six cylinders and 2.0 to 3.0 litres of displacement ensure the right strength development.

More driving modes, more driving comfort
The preconfigured driving modes are new and come in many variations to support drivers in special off-road situations in several stages. More than 30 assistance systems*, over 20 of which are completely new on-board the Amarok, provide additional driving comfort on request.

Fording depth of 800mm
Thanks to an 800mm fording depth – 300mm more than its predecessor – off-road fans can now immerse themselves even more fully in the world of off-road capability.

*Dependent on trim specification.
Images shown are for illustrative purposes only.

This is **Design**

The design of Volkswagen Commercial Vehicles' pick-up makes it clear right away: this is an Amarok. And yet every millimetre of the second generation of this all-rounder has been reimagined, redefined and redesigned.

Vehicle shown may not reflect UK specification.

The Amarok is defined by clear, powerful contours and a slightly wider stance, providing a higher slope angle for improved off-road capability and presenting a confident, rugged appearance.

Its perfected body proportions ensure optimised driving characteristics on-road and off-road, while different expressive front designs offer a high degree of individualisation.

Images shown are for illustrative purposes only.

Cabin

Digital functions and analogue operation
The Amarok's premium exterior design is matched by a high-quality, fully redesigned interior. From the materials used, to its ingenious operating concept and superior connectivity, the pick-up's interior ambience is truly top-of-the-range.

Key interior features

- More legroom in the second row of seats thanks to the increased vehicle length
- First-class seating and operating comfort combined with intelligent infotainment and state-of-the-art driver assistance systems
- Many innovative equipment features, including the up to 12.3-inch Digital Cockpit, heated leather multifunction steering wheel, vertical touch colour display with up to 12-inch screen, USB-A and USB-C interfaces, Harman Kardon sound system with 8 loudspeakers, inductive charging function and background lighting
- Robust and ergonomically perfectly designed and positioned control keys, push-buttons and rotary controls

Function keys as well as an on/off button and volume control for the infotainment system (from the Style onwards with chrome-look surround), 12-volt socket, USB-A and USB-C interface, and a mobile phone storage compartment (from the Style onwards with inductive charging function, otherwise optional) in the storage compartment below the touch colour display.

Images shown are for illustrative purposes only.

Load capability

The Amarok's loading area features lashing eyes and a longer 1,621mm load length. A range of load bed accessories, including electric roll top, hard tops and load liners, make the Amarok even more practical than before.

Its towing weight of 3.5t is now for all automatic transmissions. There is also sufficient space on the loading area between the wheel housings for a Euro pallet to be loaded crosswise, which can be lashed in place with sturdy eyelets.

Vehicles shown may not reflect UK specification.

Large cargo box and up to 1.1 tonnes payload
The Amarok's maximum payload is up to a substantial 1.1 tonnes. It is also strikingly spacious behind the double cab in the cargo box. As was the case on the previous model, the cargo bed between the wheel arches has, at 1,227mm, enough room for a Euro pallet loaded sideways or lengthways.In order to make loading and unloading easier, there is also an LED light fitted in each of the cargo box's side walls (included as standard on the PanAmericana and Aventura).

Load/trailer driver mode
This driver mode assists the driver by modifying the automatic transmission when the Amarok is being driven with a full load and/or a trailer. In this mode changing up a gear doesn't happen until a relatively high engine speed is reached in order to utilise the full output/power of the turbocharged engines. It is also possible in 'Load/trailer' mode to use the engine braking effect in a more targeted way – through changing down a gear the braking effect then becomes all the more intensive the harder the driver presses on the brake pedal.

Robust lashing rings
The load is secured via lashing rings on the cargo bed and in the side walls of the cargo box. There are three fixed load-lashing rings on each side of the cargo box. The six rings have a total tensile load capacity of 400kg.

Images shown are for illustrative purposes only.

The Amarok
Now with the 5 Plus Promise included

The Amarok, the latest pick-up from Volkswagen comes with our 5 Plus Promise as standard. Featuring 5 services + 3 MOTs, 5 years' Warranty and 5 years' Roadside Assistance for added peace of mind.

5 PLUS PROMISE
5 SERVICES + 3 MOTs
5 YEARS' WARRANTY
5 YEARS' ROADSIDE ASSIST

Covers first 5 consecutive services, limited to: 5 x Oil & Inspection Service with 2 x Pollen Filter, 3 x MOTs. Additional work, including wear and tear, is excluded. Warranty: earlier of 5 years or 124,000 miles. Servicing must be carried out in line with the requirements of the service schedule and all servicing and warranty work must be carried out at a Volkswagen Commercial Vehicle Authorised Repairer. Warranty exclusions apply (including shorter warranty period for components subject to wear and tear, mechanical adjustments (6 months/6,500 miles) and windscreen (1 month/600 miles). Roadside assistance: excludes costs of parts, garage, labour or other costs in excess of specified limits. Other limitations & exclusions apply. See Roadside Assistance Handbook for full details https://www.volkswagen-vans.co.uk/idhub/content/dam/onehub_nfz/importers/gb/downloads/roadside_assistance_handbook.pdf. Servicing & MOTs administered by Volkswagen Commercial Vehicle Financial Services. Warranty administered by Volkswagen Commercial Vehicles UK. Roadside assistance administered by AA.

New driver assistance systems

The Amarok brings plenty of state-of-the-art, innovative driver assistance systems to the world of pick-ups, offering class-leading comfort and safety.

Many of the new advanced driver assistance innovations come as standard from the Amarok equipment line onwards, with plenty of other optional equipment to choose from.

Rear Traffic Alert
Rear Traffic Alert provides visual and audible warnings of vehicles approaching the Amarok from behind, thanks to rear radar sensors.

Using this system requires front and rear Park Distance Control, which triggers when you engage reverse and is active up to 12km/h. It will also warn you if you approach objects too closely at speeds between 6km/h and 60km/h.

The benefits

- Simplifies reversing out of parking spaces in unclear parking conditions
- Prevents collisions or reduces their consequences
- Increases driver safety

'Lane Assist' lane keeping system
The camera-based 'Lane Assist' lane keeping system detects lane markings on the road and keeps the Amarok within the lane. If the driver doesn't use a turn signal to indicate a lane change, the system issues a warning by vibrating the steering wheel or performs a minor steering intervention to bring the vehicle back into position.

The benefits

- Improved safety, especially when driving on motorways
- Reduced accident or collision risk in different traffic situations

Adaptive Cruise Control
ACC/ACC 'stop & go'
Adaptive Cruise Control is a helpful feature that automatically keeps you at a safe distance from the vehicle in front of you, depending on the speed set. The sensors for this are located at the front of the Amarok and in the upper area of the windscreen. Operated using buttons on the steering wheel, it can be activated from 20km/h. And if you're stuck in traffic, you can also use 'stop & go', which lets Adaptive Cruise Control bring your car to a complete stop. The system then remains active for up to 30 seconds and then restarts the Amarok as soon as the vehicle in front starts moving.

The benefits

- Improved safety in various traffic conditions thanks to an adaptive driving style
- Helps maintain concentration on the road ahead

City Emergency Braking System with Pedestrian and Cyclist Monitoring
Automatic Autonomous Emergency Braking is an important feature of the Front Assist system. It provides an audible and visual warning if the front camera detects a potential collision. If the driver doesn't take action, the system will apply the brakes automatically.

The benefits

- A valuable aid in preventing collisions
- Helps avoid personal injury or damage to property

Electronic parking brake
The electronic parking brake replaces a conventional handbrake and is operated by a switch in the centre console of the Amarok. When engaged, it provides identical clamping forces to ensure safe parking, even on extreme slopes. If starting on a slope, the system can act as a dynamic parking brake to prevent the Amarok from rolling back.

The electronic parking brake can also be used in an emergency to continuously brake or stop the Amarok with ease. Simply pull the switch up and hold to activate. The system interprets this as an emergency braking situation. A red warning light comes on, a warning signal is emitted, and the brake lights are turned on while the switch is held.

The benefits

- Simple operation by a switch
- Easier starting on slopes
- Improved safety in emergency situations where hard braking is needed

Vehicles shown may not reflect UK specification.

Advanced airbag system with centre, curtain and knee airbags
All Amarok models come with various airbags to protect you in the event of a crash. These include front, knee, side and curtain airbags. In addition, there is a new centre airbag in the front, placed between the driver and passenger seats, that helps prevent them from colliding with each other in the event of an accident.

New driver assistance systems (continued)

Images shown are for illustrative purposes only.

Front Assist with warning and braking when vehicles, pedestrians and cyclists are detected
Autonomous Emergency Braking Front Assist uses a front camera for driver assist systems and front radar to detect imminent front collisions and to acoustically and visually warn drivers. In the event of danger, the system can even prepare the brakes for rapid braking, so that maximum braking force is generated with minimal pedal pressure. However, if a driver does not react to the warnings, Autonomous Emergency Braking Front Assist will automatically brake, bringing the Amarok to a standstill if necessary.

The Amarok also features swerve support, which helps drivers avoid collisions with stationary vehicles, pedestrians and cyclists by providing corrective steering intervention during a swerving manoeuvre. This adds an extra layer of safety for everyone on the road.

Front Assist works at speeds between 5km/h and 13km/h, and up to maximum speed in conjunction with Adaptive Cruise Control. Pedestrians are detected at speeds up to 80km/h.

The benefits

An aid to help prevent potential collisions

Helps avoid personal injury or damage to property

Speed limiter
The speed limiter can be used to set an individual maximum speed for the Amarok. This can be temporarily exceeded by firmly depressing the accelerator pedal. Once the vehicle drops below the set speed, the system is automatically reactivated.

The benefits

Relaxed driving with less fatigue, especially on long journeys

Help to potentially save fuel and reduce emissions, depending on the maximum speed set

'Side Assist' lane change system
Side Assist lane change system detects vehicles approaching your blind spot. Its radar sensors on the sides of the Amarok detect an area extending from the exterior mirrors to approximately 4 metres behind the bumper. When driving at speeds above approx. 48km/h, the system will warn you if a vehicle is approaching quickly within a range of up to approximately 18 metres. The warning is visually indicated by a constant light in the respective exterior mirror.

Side Assist lane change system is combined with Rear Traffic Alert as standard.

The benefits

Prevent dangerous situations by checking blind spots

Reduced accident risk caused by lack of attention when changing lanes

Intelligent Speed Assist
Intelligent Speed Assist is an intelligent predictive cruise control system that automatically adjusts the vehicle speed to the maximum speed detected on roads.

The system is an extension of Adaptive Cruise Control and uses the Dynamic Road Sign Display provided by the front camera to detect speed limits.

The benefits

Helps avoid speeding violations and possible fines

Keeps the Amarok at safe speeds to prevent collisions

'Area View' overhead view camera
The overhead view camera provides multiple views taken by cameras on all four sides of the Amarok. Selected on the infotainment display, they include a 360° overhead view. The function is automatically activated when the reverse gear is engaged.

The system provides a 360-degree view and helps with parking manoeuvres like parallel parking as well as obstructions and blind spots. It is also possible to display any traffic crossing in front of and behind the vehicle.

The benefits

Helps detect obstacles early in unclear situations

Connected infotainment

At the cutting edge of the digital media age.

Online-capable as standard
The Amarok is equipped with the latest technologies as standard, which enable it to connect to the internet or a mobile network, and provide the user with access to a range of different functions.

Online Connectivity Unit (OCU) with built-in eSIM card
Serves as an access unit to the internet for the use of the vehicle-specific Volkswagen Commercial Vehicles mobile online services.

Apple CarPlay™ and Android Auto™
Both provide for the integration of Apple and Google smartphone apps into the infotainment system operated using the touch colour display (can also be used wirelessly).

The Amarok is online-capable as standard (illustration shows the Aventura equipment line). Images shown are for illustrative purposes only.

Amarok **Style**

An elegant all-rounder that never fails to impress with its wealth of additional design and comfort features.

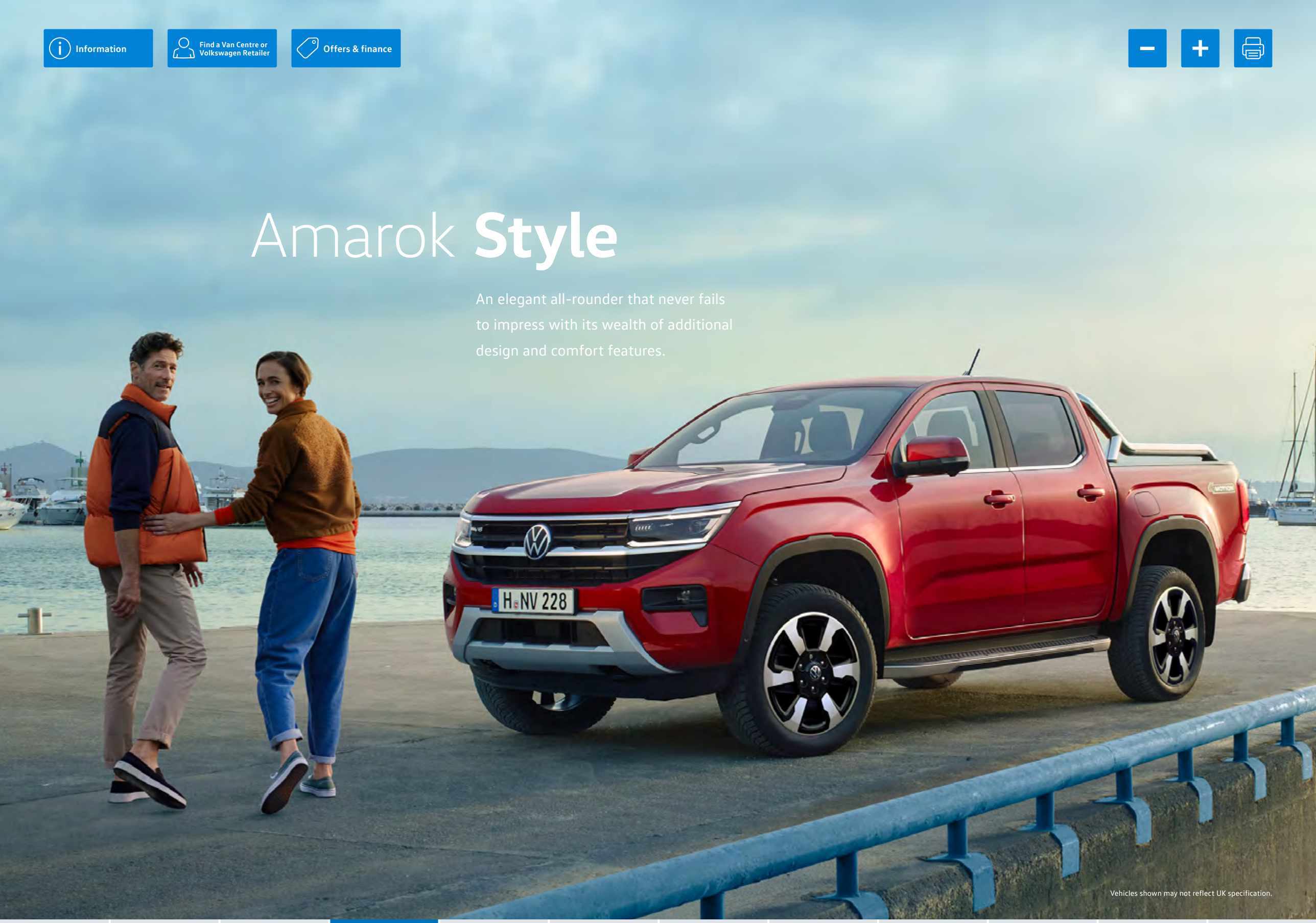

Vehicles shown may not reflect UK specification.

Standard Equipment highlights of the Amarok Style.

Images shown are for illustrative purposes only.

Interior

- Carpet floor covering in cab
- Leather-wrapped multi-function steering wheel
- Glove compartment with illumination
- Sun visor on driver and front passenger side with illuminated vanity mirror
- Headliner (in Ebony Black)
- Gearshift/selector lever knob, leather
- 2 reading lights for driver and front passenger with glasses compartment in overhead console
- Ambient lighting
- 10-way power-adjustable driver seat and 8-way adjustable front passenger seat
- Driver seat with map pocket
- Dual-zone climate control
- ArtVelours microfleece fabric seats

Exterior

- 18" Amadora alloy wheels – silver
- Grille with chrome strip
- Body-coloured bumper in front
- Black bumper in rear
- Side step black with chrome insert
- Tie-downs on the cargo area
- Exterior finishes (black)
- Chrome styling bar
- Mudflaps (front and rear)
- Body-coloured rear gate handle
- Wing mirrors: heated, power adjustable and power folding
- Front fog lights with cornering function
- Front side windows in heat-reflecting glass with tinted windows in passenger compartment
- Heated windscreen

Infotainment Package

- Digital Cockpit 12" with colour screen
- Preparation for online services
- Infotainment: 12" with navigation
- DAB+ digital radio reception
- Inductive phone charging

Safety and Security

- Electronic Stability Control
- Lockable wheel bolts
- Child seat anchors ISOFIX on outer rear seats, i-Size compatible
- 3 head restraints in second row of seats
- 3-point belts, height adjustable in first row of seats
- Rear gate lockable via central locking system
- Central locking with radio remote control, interior controls with SAFELOCK
- Airbags incl. knee airbags for driver and front passenger and front passenger airbag deact. and child seat recognition
- Side and curtain airbags including centre airbag
- Anti-theft alarm system with interior monitoring, backup horn and towing protection
- Automatic Post-Collision Braking System
- eCall* Emergency System
- Warning signal and warning light for front and rear seat belts not fastened
- Autonomous Emergency Braking Front Assist with Pedestrian and Cyclist Monitoring

Functional Equipment

- Towbar preparation
- Fuel tank volume (80 litres)
- 230-V outlet in rear centre console
- 230-V outlet in load bay
- Electromechanical parking brake

Driver Assistance Systems

- Lane keeping system Lane Assist and lane change system Side Assist
- Park Distance Control in front and rear with manoeuvre braking
- IQ.LIGHT LED matrix headlamps
- Adaptive Cruise Control ACC and Dynamic Road Sign Display
- Rear view camera
- Remote control central locking system with keyless starting system
- Tyre pressure monitoring system

Service and Warranty

5 Plus Promise:

- 5 Services + 3 MOTs**
- 5 Years' Warranty**
- 5 Years' Roadside Assistance**

* Connectivity of the Next-Generation "eCall" Emergency Call System ("NG eCall") is dependent on the availability of third-party services and may not be possible in some scenarios, including where telecommunications infrastructure is unable to receive or relay data transmitted by the vehicle. UK telecoms infrastructure is currently undergoing upgrades to enable compatibility with NG eCall and cannot fully support data transmitted via NG eCall until those upgrades are complete. NG eCall will operate in a limited capacity until that time and should not be relied upon exclusively in an emergency. For further information on system limitations please speak to your retailer.

** Covers first 5 consecutive services, limited to: 5 x Oil & Inspection Service with 2 x Pollen Filter, 3 x MOTs. Additional work, including wear and tear, is excluded. Warranty: earlier of 5 years or 124,000 miles. Servicing must be carried out in line with the requirements of the service schedule and all servicing and warranty work must be carried out at a Volkswagen Commercial Vehicle Authorised Repairer. Warranty exclusions apply (including shorter warranty period for components subject to wear and tear, mechanical adjustments (6 months/6,500 miles) and windscreen (1 month/600 miles). Roadside assistance: excludes costs of parts, garage, labour or other costs in excess of specified limits. Other limitations & exclusions apply. See Roadside Assistance Handbook for full details https://www.volkswagen-vans.co.uk/idhub/content/dam/onehub_nfz/importers/gb/downloads/roadside_assistance_handbook.pdf. Servicing & MOTs administered by Volkswagen Commercial Vehicle Financial Services. Warranty administered by Volkswagen Commercial Vehicles UK. Roadside assistance administered by AA.

Amarok **Dark Label**

Exclusive dark styling details, striking 20″ matte finish alloy wheels and matte black roof rails, it's designed to make an impression.

Vehicles shown may not reflect UK specification.

Standard equipment of the Amarok Dark Label (in addition to Style).

Exterior

- Black bumper in rear
- Black exterior mirror housings and door handles for Dark Label
- Black rear gate handle
- Black roof rails
- Black side steps
- Body-coloured bumper in front, X-style
- Load compartment coating
- Load compartment cover, soft cover
- Powder-coated (Black) styling bar

Wheels

- 4 Alloy wheels "Bendigo" 20" painted Matte Black & spare wheel
- Tyres - 255/55 R20 110V

Safety Equipment

- Rear combination lamps

Interior Trim

- Seat trim covers Dark Label with ArtVelours microfleece insert
- Velour floor mats (Premium with lettering "Dark Label")

Comfort and Convenience

- Standard dashboard
- Dark Label seat package

Functional Equipment

- Differential lock in rear

Images shown are for illustrative purposes only.

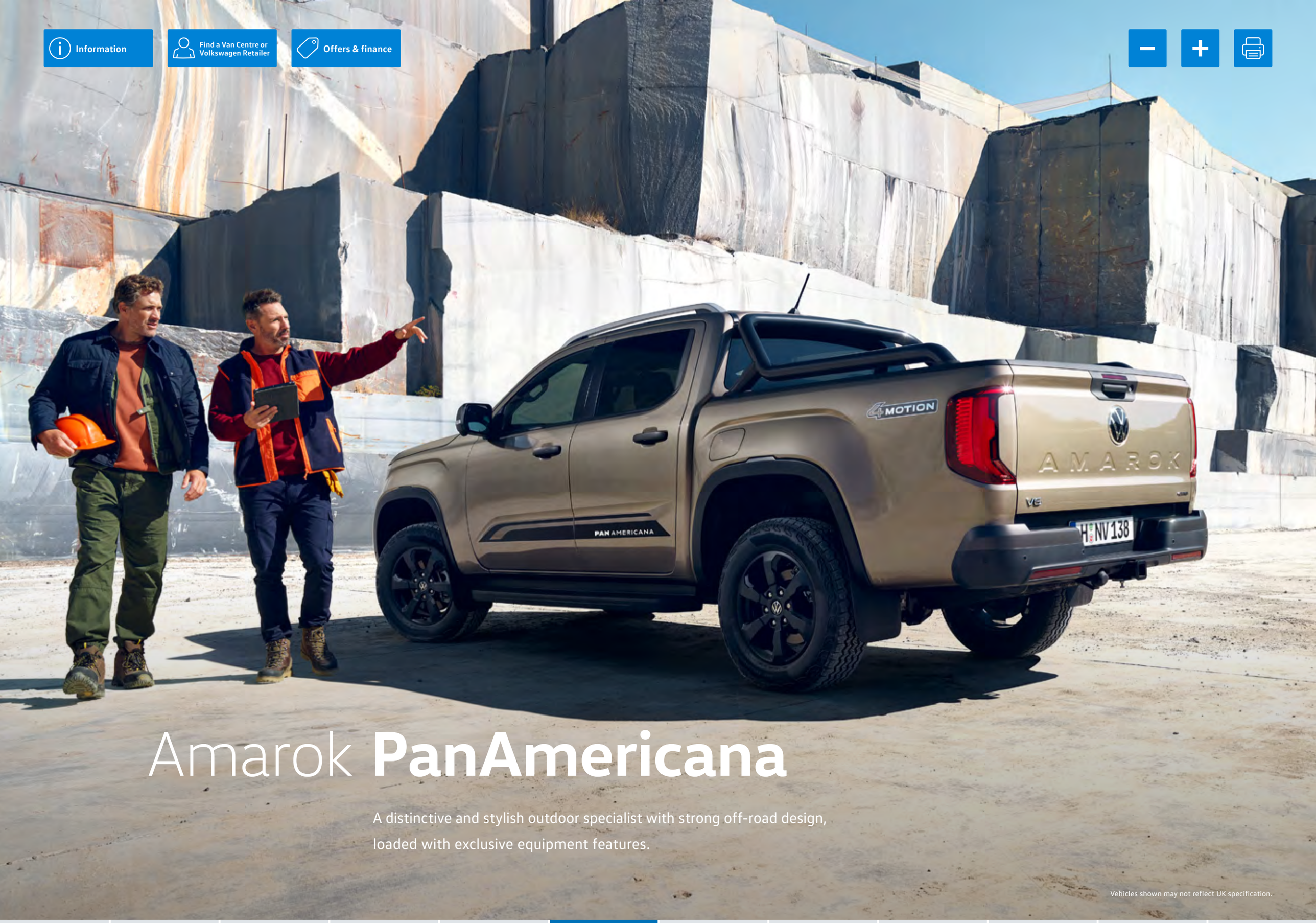

Amarok **PanAmericana**

A distinctive and stylish outdoor specialist with strong off-road design, loaded with exclusive equipment features.

Vehicles shown may not reflect UK specification.

Standard equipment of the Amarok PanAmericana (in addition to Style).

Interior

Cricket leather seats
10-way power-adjustable driver and front passenger seats

Exterior

18" Amadora alloy wheels – black
Matt black styling bar
Side step black
Silver roof rails
Contrast mirrors and door handles
Body-coloured bumper in front, X-style

Infotainment

Harman Kardon premium audio system with eight loudspeakers, inclusive of sub-woofer, and 640 watts output

Functional Equipment

Differential lock in rear
Underride guard
LED cargo area lighting
Comfort suspension system

Driver Assistance Systems

360 area view camera

Images shown are for illustrative purposes only.

Amarok **Aventura**

Our exceptional top-of-the-range lifestyle-oriented model, for stylish urban and off-road use. Setting new pick-up standards with its singular design, equipment details and unique pick-up feel.

Vehicles shown may not reflect UK specification.

Standard equipment of the Amarok Aventura (in addition to Style).

Interior

Savona leather seats
10-way power-adjustable driver and front passenger seats
Heated steering wheel

Exterior

21" Varberg Alloy wheels – silver
Silver roof rails
Chrome-plated exterior mirror and door handles
Body-coloured bumper in front, X-style
Body colour rear styling bar

Infotainment

Harman Kardon premium audio system with eight loudspeakers, inclusive of sub-woofer, and 640 watts output

Functional Equipment

LED cargo area lighting
Comfort suspension system

Images shown are for illustrative purposes only.

Wheels

01

02

03

04

05

01 **18" Amadora Alloy Wheels**
7.5 x 18, spare wheel (alloy wheel) with original equipment tyre. 255 / 65 R18 tyres.
| S |

02 **18" Amadora Painted Black Alloy Wheels**
7.5 x 18, spare wheel (alloy wheel) with original equipment tyre. 255 / 65 R18 tyres.
| PA |

03 **20" Bendigo Alloy Wheels**
8 x 20, spare wheel (alloy wheel) with original equipment tyre. 83A: 255 / 55 R20 110V tyres.
| S | PA |

04 **20" Bendigo Matte Black Alloys Wheels**
8 x 20, spare wheel (alloy wheel) with original equipment tyre. 83A: 255 / 55 R20 110V tyres.
| DL |

05 **21" Varberg Alloy Wheels**
8.5 x 21, spare wheel (alloy wheel) with original
equipment tyre. 275 / 45 R21 110V tyres.
| A |

Standard Optional at extra cost **| S |** Style **| DL |** Dark Label **| PA |** PanAmericana **| A |** Aventura

Detailed information regarding tyre efficiency labelling and technical specifications on all potential tyre fitments can be found by visiting the Volkswagen Commercial Vehicles online car configurator at www.volkswagen-vans.co.uk/en/configurator.html

Paint

01

02

03

04

05

06

07

08

Solid paint

01	Clear White	**| S | PA | A |**

Metallic paint

02	Bright Beige	| S | PA | A |
03	Deep Red	| S | PA | A |
04	Midnight Black	| S **| DL |** PA | A |
05	Bright Blue	| S **| DL |** PA | A |
06	Medium Silver	| S | PA | A |
07	Dark Grey	| S **| DL |** PA | A |
08	Reed Green	| S | PA | A |

Standard Optional at extra cost **| S |** Style **| DL |** Dark Label **| PA |** PanAmericana **| A |** Aventura

Detailed information regarding tyre efficiency labelling and technical specifications on all potential tyre fitments can be found by visiting the Volkswagen Commercial Vehicles online car configurator at www.volkswagen-vans.co.uk/en/configurator.html

Upholstery

Style. 'Style' centre seat panel in 'ArtVelours' microfleece

Dark Label. 'Dark Label' centre seat panel in 'ArtVelours' microfleece

PanAmericana. 'Cricket' leather seats

Aventura. 'Savona' leather seats

	'Style' centre seat panel in 'ArtVelours' microfleece	'Dark Label' centre seat panel in 'ArtVelours' microfleece	'Cricket' leather	'Savona' leather
Style	●			
Dark Label		●		
PanAmericana			●	
Aventura				●

● Standard equipment ○ Optional equipment

Images shown are for illustrative purposes only.

Engine and gearbox data

Engine specifications	240PS 3.0 TDI 10sp Automatic 4MOTION
Fuel type	Diesel
Mixture preparation/injection method	Common rail direct injection
EU exhaust emission standard	LDT ST6.2
Number of cylinders	V6
Cubic capacity	2.993ccm
Output, PS at rpm	240 PS @ 3,250rpm
Torque, max. Nm at rpm	600
Fuel tank capacity	80 litre
10-speed automatic	●
All-wheel drive	●
Alternator	250 A

● Standard ○ Available – Not available

Fuel consumption, performance and emissions

Engine/transmission	RDE2 Compliant	Combined CO_2 emissions, g/km[1], Max. (worst case)	Combined CO_2 emissions, g/km[1], Min. (best case)	Combined fuel consumption mpg[1], Min. (worst case)	Combined fuel consumption mpg[1], Max. (best case)	Combined fuel consumption (ltr/100km)[1], Max. (worst case)	Combined fuel consumption (ltr/100km)[1], Min. (best case)	Acceleration, seconds 0 - 62mph	Top speed, mph (where law permits)
Amarok Style									
Style 240PS 3.0 TDI 10sp Automatic 4MOTION	Yes	277	270	26.9	27.4	10.2	10.1	8.8	112
Amarok Dark Label									
Dark Label 240PS 3.0 TDI 10sp Automatic 4MOTION	Yes	281	271	26.4	27.4	10.3	10.1	8.8	112
Amarok PanAmericana									
PanAmericana 240PS 3.0 TDI 10sp Automatic 4MOTION	Yes	282	271	26.4	27.4	10.3	10.1	8.8	112
Amarok Aventura									
Aventura 240PS 3.0 TDI 10sp Automatic 4MOTION	Yes	280	269	26.4	27.4	10.3	10.1	8.8	112

1 Figures shown are for comparability purposes; only compare fuel consumption and CO_2 figures with other vehicles tested to the same technical procedures. These figures may not reflect real life driving results, which will depend upon a number of factors including the accessories fitted (post-registration), variations in weather, driving styles and vehicle load. Data correct at 1.10.2025. Figures quoted are for a range of configurations (including non-UK) and are subject to change due to ongoing approvals/changes. Please consult your authorised Volkswagen Van Centre for further information.

RDE2 refers to Real Driving Emissions Step 2.

Dimensions

Approach angle	30° Grad
Departure angle	23° Grad
Ramp angles	21° Grad
Wheelbase	3,270mm
Turning circle	12.9m
Vehicle length min.	5,350mm
Vehicle length max.	5,390mm
Vehicle width without mirrors min.	1,910mm
Track for steered axle rear max.	1,620mm
Height max.	1,884mm
Load bed – length	1,624mm
Load bed width	1,584mm
Load bed width between wheel arches	1,227mm
Max. headroom in first row of seats	1,040mm
Effective headroom in second row of seats	989mm
Inside width (first row) 4-door	1,526mm
Inside width (second row) 4-door	1,515mm

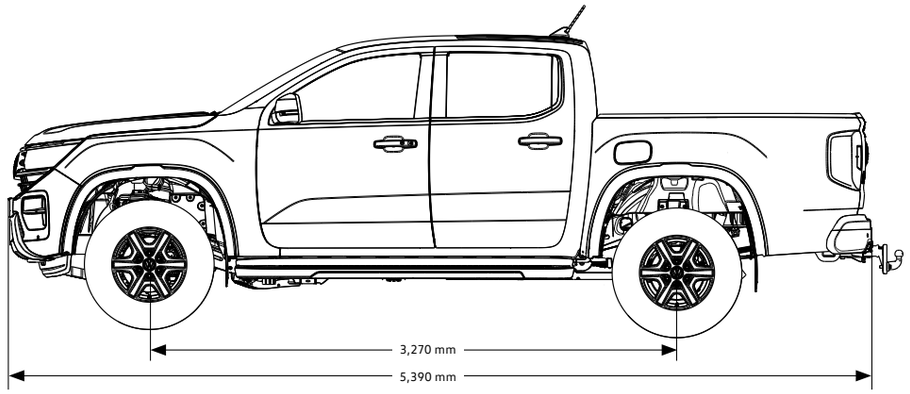

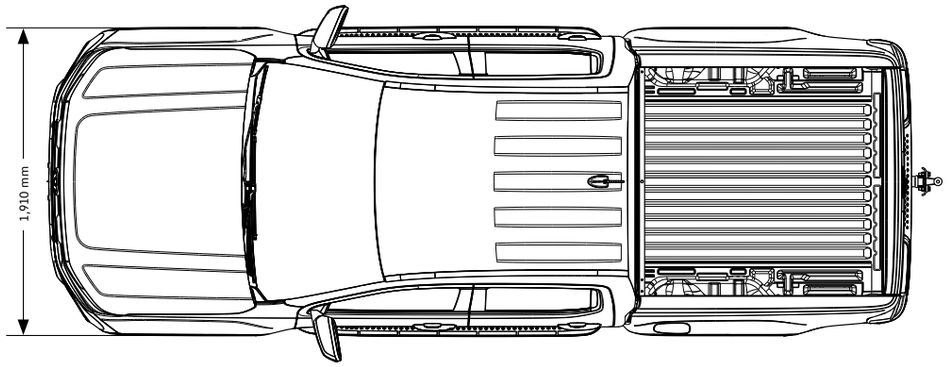

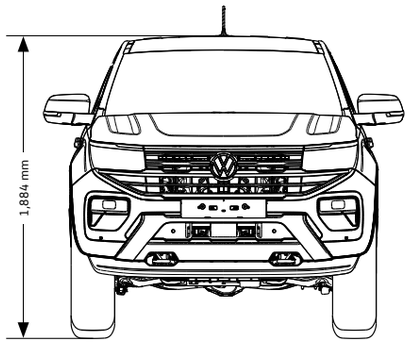

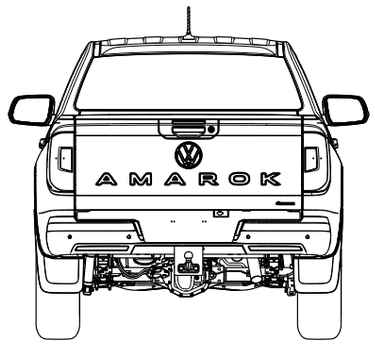

Weights

Trim	Options	Gross vehicle weight, kg	Axle load limit front / rear, kg	Trailer weight braked 12% / unbraked, kg	Gross train weight, kg	Kerb weight, kg	Payload, kg	Roof rails, kg
Style	-	3,350	1,490 / 1,959	3,500	6,500	2,300	1,050	85
Style	Z0T - 20" Bendigo alloy wheels	3,350	1,490 / 1,959	3,500	6,500	2,320	1,030	85
Style	W55 - Towing pack including diff lock	3,350	1,490 / 1,959	3,500	6,500	2,334	1,016	85
Dark Label	-	3,350	1,490 / 1,959	3,500	6,500	2,344	1,006	85
PanAmericana	-	3,350	1,490 / 1,959	3,500	6,500	2,312	1,039	85
PanAmericana	Z0T - 20" Bendigo alloy wheels	3,350	1,490 / 1,959	3,500	6,500	2,321	1,029	85
PanAmericana	W56 - Towing pack	3,350	1,490 / 1,959	3,500	6,500	2,350	1,000	85
Aventura	-	3,190	1,490 / 1,785	3,500	6,400	2,324	866	85
Aventura	W55 - Towing pack including diff lock	3,190	1,490 / 1,785	3,500	6,400	2,362	828	85

1 Unladen weight includes approximately 90% fuel load and 75kg for driver.

2 Payload = gross vehicle weight minus unladen weight. Quoted weights are for vehicles with standard specification. Unladen weight and payload may be influenced by trimline, factory options and Van Centre fitted accessories. Roof load limit: 100kg (with two roof carriers) or 150kg (with at least four roof carriers). Trailer nose weight: 100kg.

Model prices

Image shown is for illustrative purposes only. Vehicle shown is not UK specification.

5 PLUS PROMISE

- 5 SERVICES + 3 MOTs
- 5 YEARS' WARRANTY
- 5 YEARS' ROADSIDE ASSIST

* Manufacturer's on the road (OTR) package	
Delivery to Dealer	£835.00
Number plates	£20.00
VAT	£171.00
Road Fund Licence (12 months)	£360.00
First registration fee	£55.00
Basic OTR price (exc. VAT)	£1,270 .00
Total OTR price (inc. VAT)	**£1,441.00**

Model prices (continued)

Trimline	Engine/transmission	RDE2 Compliant	Fuel type	Basic exc. VAT	Total inc. VAT	Total RRP inc. OTR*[2] exc. VAT	Total RRP inc. OTR*[2] inc. VAT
Amarok Style							
	Style 240PS 3.0 TDI 10sp Automatic 4MOTION	Yes	Diesel	£46,870.00	**£56,244.00**	£48,140.00	**£57,685.00**
Amarok Dark Label							
	Dark Label 240PS 3.0 TDI 10sp Automatic 4MOTION	Yes	Diesel	£47,870.00	**£57,444.00**	£49,140.00	**£58,885.00**
Amarok PanAmericana							
	PanAmericana 240PS 3.0 TDI 10sp Automatic 4MOTION	Yes	Diesel	£49,270.00	**£59,124.00**	£50,540.00	**£60,565.00**
Amarok Aventura							
	Aventura 240PS 3.0 TDI 10sp Automatic 4MOTION	Yes	Diesel	£50,120.00	**£60,144.00**	£51,390.00	**£61,585.00**

* Please **click here** for more details on manufacturer's on the road (OTR) package.

Volkswagen Commercial Vehicles may change RRPs at any time (this includes where there are government changes in regulation and/or legislation). There may be a delay to any RRP displaying correctly on our materials. Always obtain prices from your chosen authorised Van Centre.

1 Figures shown are for comparability purposes; only compare fuel consumption and CO2 figures with other vehicles tested to the same technical procedures. These figures may not reflect real-life driving results, which will depend upon a number of factors including the accessories fitted (post-registration), variations in weather, driving styles and vehicle load. Data correct at 1.9.2026. Figures quoted are for a range of configurations (including non-UK) and are subject to change due to ongoing approvals/changes. Please consult your authorised Volkswagen Van Centre for further information.

RDE2 refers to Real Driving Emissions Step 2

Optional equipment

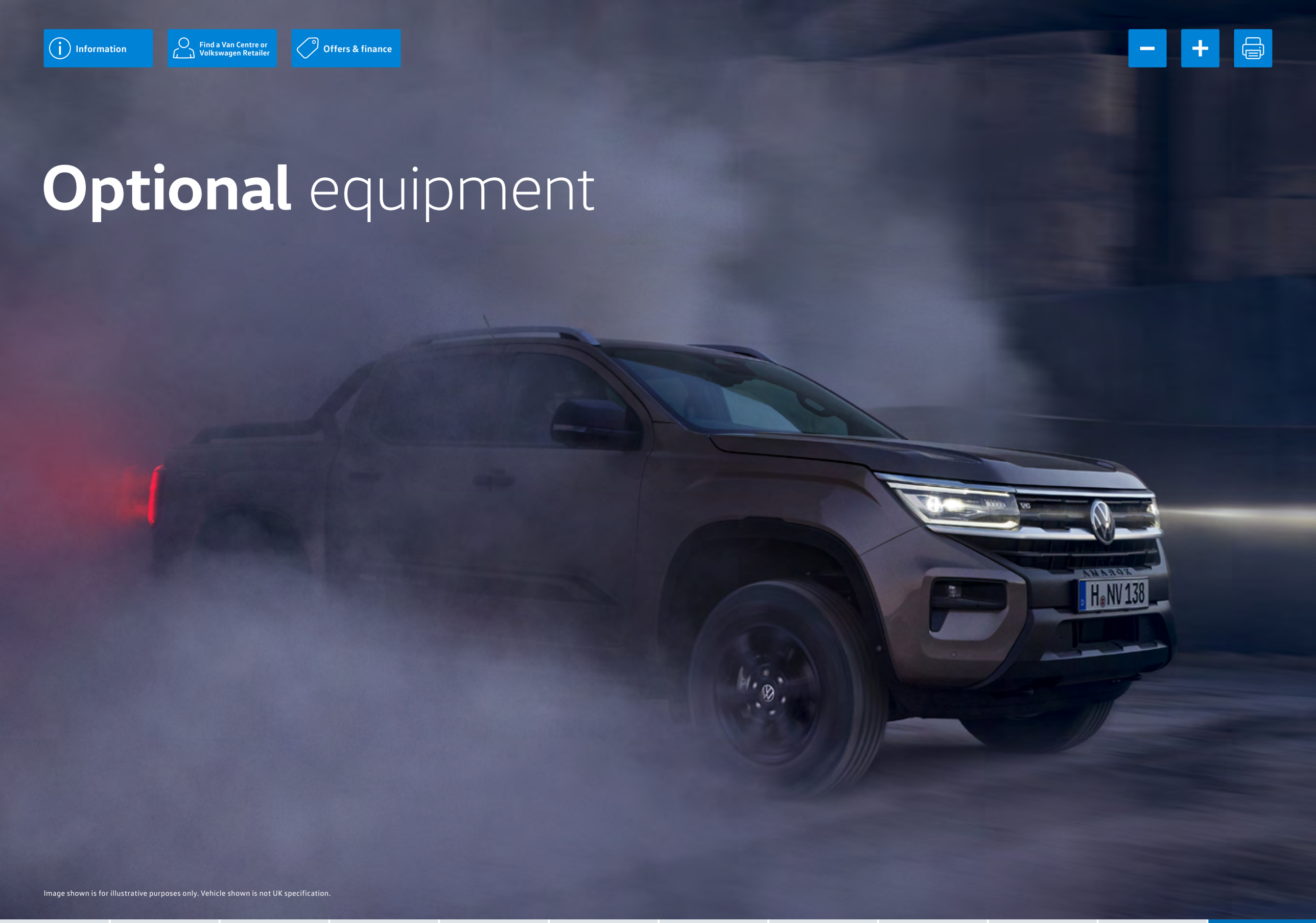

Image shown is for illustrative purposes only. Vehicle shown is not UK specification.

Options

Paint	PR code	Style Basic exc. VAT	Style Total RRP inc. VAT	Dark Label Basic exc. VAT	Dark Label Total RRP inc. VAT	PanAmericana Basic exc. VAT	PanAmericana Total RRP inc. VAT	Aventura Basic exc. VAT	Aventura Total RRP inc. VAT
Solid. Clear White (2E2E).	As shown	○	○	–	–	○	○	○	○
Metallic. Bright Blue (4R4R)*, Bright Beige (7I7I), Dark Grey (8I8I)*, Deep Red (9I9I), Medium Silver (3W3W), Midnight Black (6P6P)*, Reed Green (8P8P).	As shown	£530.00	£636.00	○	○	£530.00	£636.00	£530.00	£636.00
Option pack content by trim level									
20" Bendigo Alloy wheels. Alloy wheels 'Bendigo' 8 x 20, spare wheel (alloy wheel) with original equipment tyre (Z0T), 255 / 55 R20 110V tyres (83A). Cannot be ordered in combination with W55/W56 towing packs.	Z0T	£875.00	£1,050.00	–	–	£875.00	£1,050.00	–	–
Towing pack. Trailer hitch (1D1), Trailer hitch, 13-pin (IP4), Differential lock in rear (1Y4), Lane keeping system Lane Assist and lane change system Side Assist with trailer support (79F), Assistance package 6 in combination with trailer hitch (K58).	W55	£1,280.00	£1,536.00	–	–	–	–	£1,280.00	£1,536.00
Towing pack. Trailer hitch (1D1), Trailer hitch, 13-pin (IP4). Cannot be ordered in combination with 20" Bendigo Alloy wheels (Z0T).	W56	–	–	–	–	£845.00	£1,014.00	–	–

● Standard – Not available ○ At no extra cost

Where additional equipment is required by chosen options, this will be at additional cost. See the relevant option for recommended pricing or consult your local authorised Van Centre. Some options may not be compatible with other options. To check the availability of your chosen options, please use our configurator or consult your local authorised Van Centre.

* Available for Dark Label.

Please note: Not all paint and upholstery combinations can be ordered together and in some instances certain combinations may incur extra cost.
Not all paint finishes may be available for every trimline. Please check details and availability with your Volkswagen Van Centre at the time of ordering.

Volkswagen Commercial Vehicles may change RRPs at any time (this includes where there are government changes in regulation and/or legislation). There may be a delay to any RRP displaying correctly on our materials. Always obtain prices from your chosen authorised Van Centre.

The Amarok

This brochure supersedes all previous publications.
Issue: 09 September 2026
www.volkswagen-vans.co.uk

Please note: Screen technology does not allow exact reproduction of the paint and upholstery colours. Some of the vehicles shown are European specification and may be fitted with optional equipment or accessories that are available at extra cost, or do not reflect current specification. All data and specifications are in accordance with information available at the time of publication and are subject to change without notice. Vehicles not currently in UK stock and customer order vehicles may take a number of weeks for delivery. Certain combinations of vehicle specifications and factory-fitted options are not compatible and therefore all orders received are subject to confirmation. Models, factory fitted-options and paint and upholstery options are subject to availability. Please check details and availability with an authorised Volkswagen Van Centre at the time of ordering.