The Crafter panel van
Brochure

Commercial Vehicles

Ready for the toughest jobs.

- Robust design, technologies and driver assistance systems.
- More practical, economical, and innovative than ever before.
- Outstanding in its class.

The perfect workplace.

- Available with an ergoComfort/ergoActive suspension seat*
- A variety of storage solutions with a wide range of different ports and connections
- Available with a heated leather multi-function steering wheel*
- Available with a 230V socket (300w)*

Excellent loadability.

- High load compartment of up to 2,196mm
- Wide side sliding door with an opening width of 1,311mm
- LED load compartment lighting*
- 100mm lower loading sill [2]
- Up to 18.4m load volume [1]

A choice of drive systems.

- Front wheel drive delivers the highest possible load compartment
- The first van to offer an 8-speed automatic gearbox with a choice of front wheel, rear wheel and 4MOTION all-wheel drive

Value for money.

- High residual value
- Low fuel consumption
- Low maintenance costs

Superb connectivity.

- Telematics preparation including FMS 3.0 compatibility*
- Customer-specific function control unit (for special bodies and conversions)*
- Car-Net mobile online services*

Load securing options.

- Available with an optional universal floor*
- Load compartment designed for the addition of flexible shelving systems
- Interior roof rack*
- Up to 14 load-lashing rings

Numerous driver assistance and safety systems.

- The first with City Emergency Braking and Automatic Post-Collision Braking as standard
- Electromechanical Servotronic steering as standard
- Side protection*
- Lane Keeping Assist*
- Rear Traffic Alert*
- Trailer Assist*
- Park Assist*
- LED headlights*

* Available as an option. 1 Will be introduced at a later date. 2 Figure applies to the Crafter panel van with front wheel drive, compared to rear wheel drive and 4MOTION all-wheel drive.
Illustration includes options at extra charge. Please contact your local Volkswagen Commercial Vehicles Van Centre for details of the standard equipment and optional extras available.

Contents

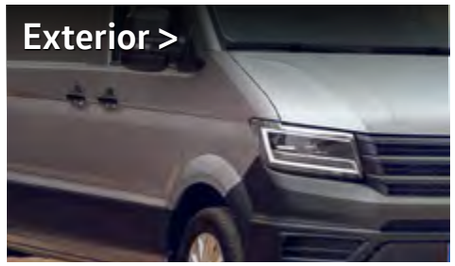
Exterior >

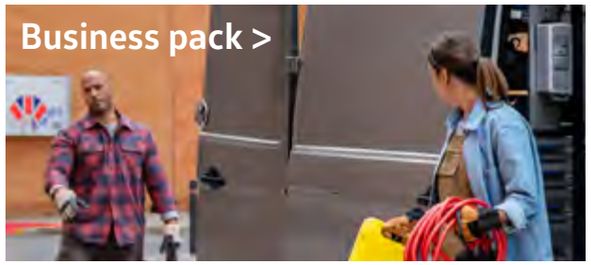
Business pack >

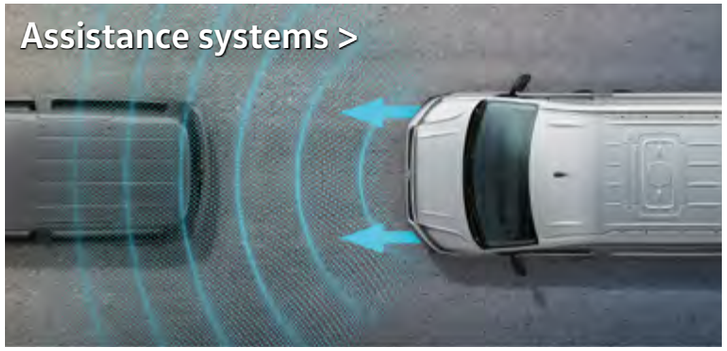
Assistance systems >

Price list >

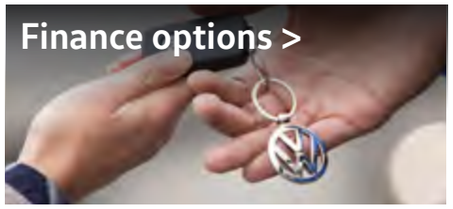
Finance options >

Infotainment & connectivity >

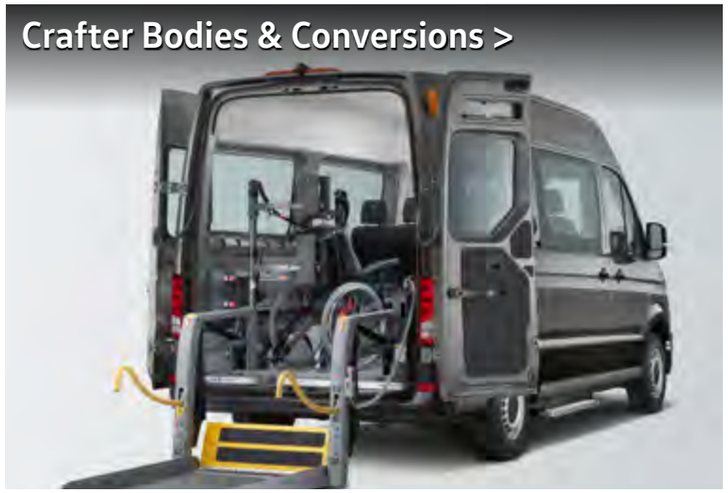
Crafter Bodies & Conversions >

Technical information >

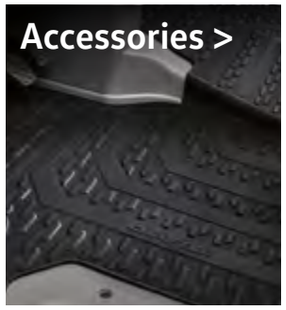
Accessories >

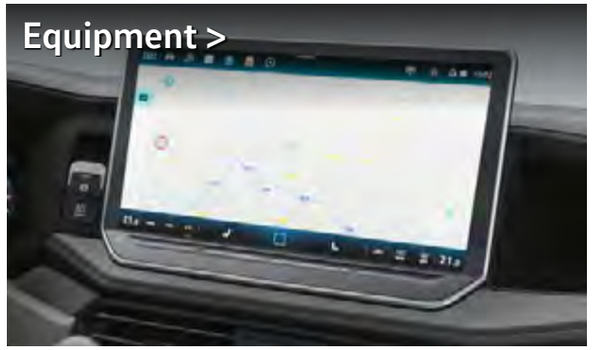
Equipment >

Interior >

Model variants >

Paint & upholstery >

The Crafter panel van >

Drive systems >

Finance, insurance, servicing & warranties >

Illustrations may include options at extra charge. Please contact your local Volkswagen Commercial Vehicles Van Centre for details of the standard equipment and optional extras available.

Crafted by you.
Engineered by us.

More practical, economical and innovative than ever before.

The Crafter panel van is a commercial vehicle like no other. Designed by our customers for our customers. Built from the ground up, using 100% Volkswagen DNA as a cost-effective, transport-oriented solution to meet the demands of a diverse range of businesses. The Crafter panel van represents state-of-the-art manufacturing, with the sole aim of making it the best commercial vehicle in its class.

FN 50 2021 Most Reliable Nameplate – Volkswagen Commercial Vehicles

WHAT CAR? VAN AND COMMERCIAL VEHICLE AWARDS 2022 Best Aftersales Volkswagen Commercial Vehicles

WHAT CAR? VAN AND COMMERCIAL VEHICLE AWARDS 2022 Volkswagen Crafter

Illustration includes options at extra charge. Please contact your local Volkswagen Commercial Vehicles Van Centre for details of the standard equipment and optional extras available.

The perfect workplace.

Delivering storage, comfort and technology.

Interior features.

- A New steering wheel
- B New dashboard
- C Digital cockpit with dynamic road sign display
- D Electronic parking brake switch on dashboard
- E Emergency call system
- F Upgraded infotainment system with 10.4" or 12.9" screens
- G USB-C data and charging ports
- H Wireless mobile phone charging
- I Cup holder on automatic and gearstick on a manual

Illustration includes options at extra charge.
Please contact your local Volkswagen Commercial Vehicles Van Centre for details of the standard equipment and optional extras available.

The ergoComfort suspension seat.

A Suspension seat with weight adjustment
B Longitudinal seat adjustment
C Seat height adjustment
D Seat depth adjustment
E Seat tilt adjustment
F Backrest adjustment
G Electric 4-way lumbar support
H Headrest adjustment
I Armrest adjustment

The ergoActive suspension seat.

J Seat massage function*

* This feature is in addition to the standard features of the ergoComfort seat.

The ergoComfort suspension seats.

Adjustable for a more comfortable driving position.

The optional ergoComfort and ergoActive suspension seats with 20-way adjustment are designed to deliver optimum comfort through the reduction of road-related jolts. The combination of electric and manual adjustment allows the driver to select their preferred seating position. In addition, should you desire, the massage function is also available for the ergoActive suspension seat only.

Overhead storage with two single DIN slots standard on all Crafters.

A wide range of drive systems.

The Crafter panel van – available with an 8-speed automatic gearbox and a choice of three different drive systems.

The 8-speed automatic transmission is the only one in its class that can be combined with three different drive systems. It has been specially calibrated for the Crafter panel van's specific driving characteristics, enabling both comfortable and consumption-optimised handling.

140PS engine	6-speed manual gearbox or 8-speed automatic gearbox
177PS engine	6-speed manual gearbox or 8-speed automatic gearbox

163PS engine	6-speed manual gearbox or 8-speed automatic gearbox

177PS engine	6 or 8-speed automatic gearbox

Illustrations may include options at extra charge. Please contact your local Volkswagen Commercial Vehicles Van Centre for details of the standard equipment and optional extras available.

State-of-the-art
driver assistance and safety systems.

Watch video >

Front Assist with City Emergency Braking System.

Crosswind Assist.

Front Assist with City Emergency Braking System.
Standard across the Crafter panel van range, this detects critical distances, warns of hazardous situations and when necessary, triggers emergency braking. The aim of the function is to prevent or mitigate the consequences of Head-on collisions with vehicles, pedestrians and cyclists.

Crosswind Assist.
As part of the Electronic Stabilisation Programme (ESP), Crosswind Assist applies adaptive braking intervention when the vehicle encounters a strong crosswind. Standard on Crafter panel vans.

Illustrations may include options at extra charge.
Please contact your local Volkswagen Commercial Vehicles Van Centre for details of the standard equipment and optional extras available.

Assistance systems to help keep you one step ahead.

Watch video >

Automatic Post-Collision Braking System.

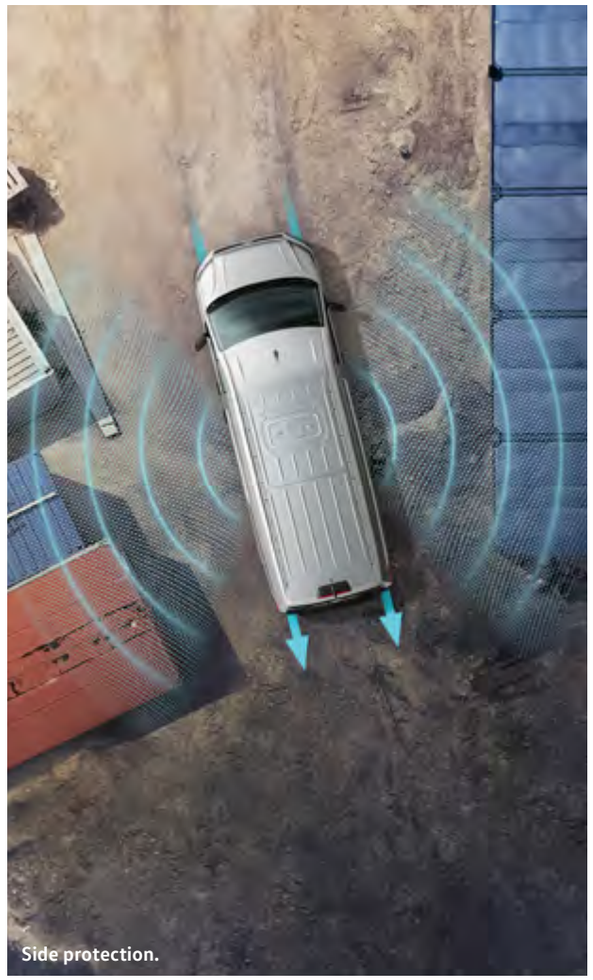

Side protection.

Watch video >

Adaptive Cruise Control (ACC).

Lane Keeping Assist.

Automatic Post-Collision Braking System.
Fitted as standard, the Automatic Post-Collision Braking System triggers braking after a collision, with the aim of preventing secondary collisions.

Side protection.
Available as an option, Side protection monitors the vehicle's sides and alerts you with visual and audible warnings if you're getting too close to other vehicles, pillars, walls or pedestrians.

Adaptive Cruise Control (ACC).
Available as an option on Commerce Plus only, ACC uses a front radar to measure the distance (up to 120 metres) and speed relative to vehicles driving ahead. It automatically regulates the pre-set distance. ACC also includes the Front Assist with City Emergency Braking System. This detects critical distances, warns of hazardous situations and when necessary, a speed of up to 18mph triggers emergency braking.

Lane Keeping Assist.[1]
Available as an option, Lane Keeping Assist countersteers the vehicle if the driver unintentionally drifts from a lane. The system also emits audible and visual warnings via the multi-function display to alert the driver of danger.

1 Within the system's thresholds.
Illustrations may include options at extra charge. Please contact your local Volkswagen Commercial Vehicles Van Centre for details of the standard equipment and optional extras available.

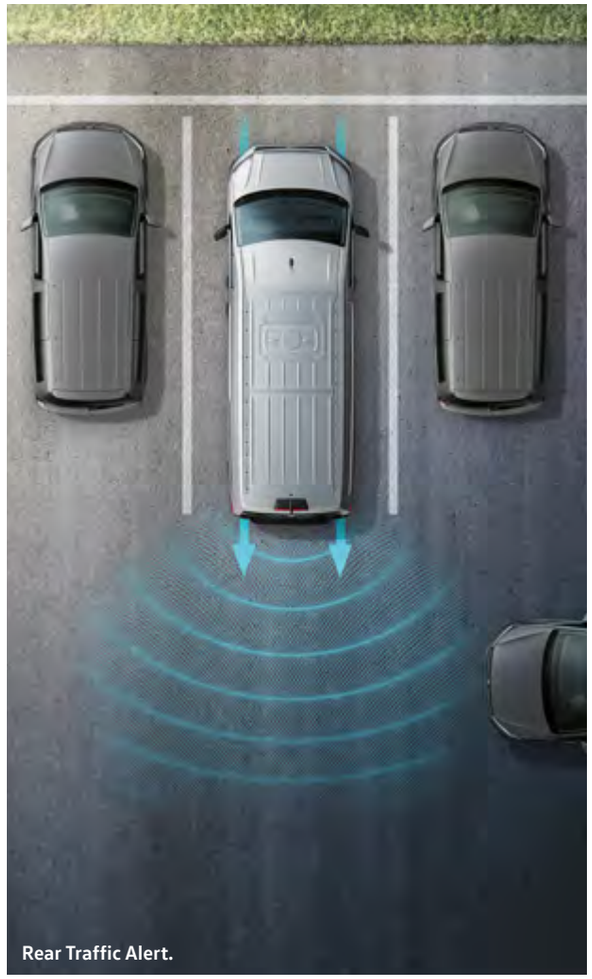
Rear Traffic Alert.

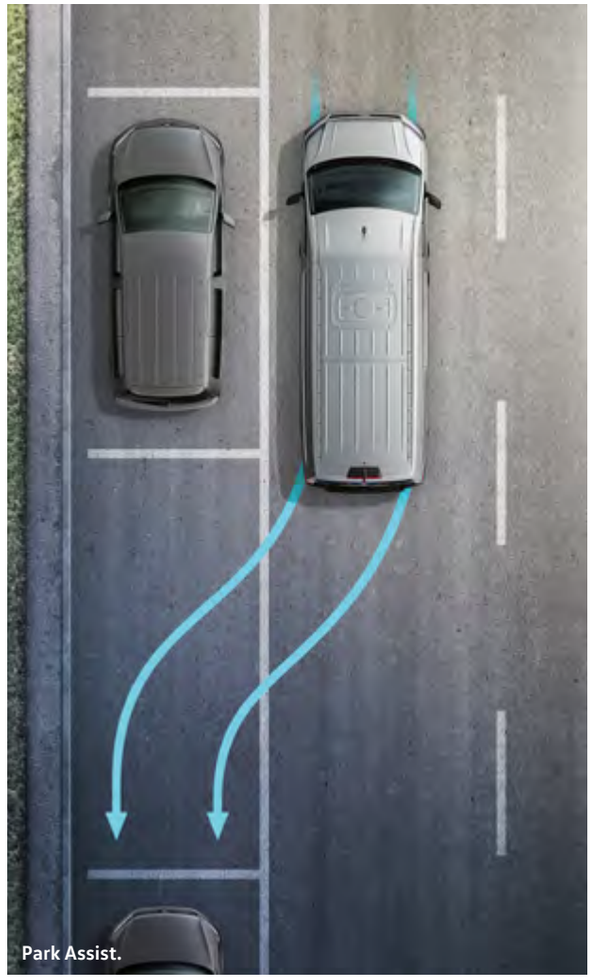
Park Assist.

Light Assist.

Rear Traffic Alert.
Available as an option, Rear Traffic Alert helps by emitting an audible warning when reversing out of a parking space if another vehicle is getting too close. If the driver fails to respond, the system intervenes and applies braking to help avoid a collision.

Park Assist.
This useful option aids positioning into parking spaces. When reverse is engaged, the vehicle assumes control of the steering. All that's required of the driver is operate the clutch, accelerator and brake pedals, whilst keeping a good lookout.

Light Assist high-beam assistant.
Automatically dips the headlights when it detects oncoming vehicles, or vehicles travelling ahead, to prevent other drivers from becoming dazzled. The system automatically switches on the high-beam headlights when the vehicle is travelling above 37mph in darkness.

Illustrations may include options at extra charge. Please contact your local Volkswagen Commercial Vehicles Van Centre for details of the standard equipment and optional extras available.

Electromechanical Servotronic steering.
Fitted as standard, Electromechanical Servotronic steering provides a speed-sensitive operation with active return. This improves the steering feel around the mid-point, providing improved levels of steering precision.

Electronic Stabilisation Programme (ESP).
Fitted as standard, ESP is designed to prevent the vehicle from swerving in critical driving conditions by controlled and targeted intervention in the brakes and engine management system. This helps to maximise directional stability.

Rear-view camera.[1]
Simplifies parking by showing a limited view of the area behind the vehicle on the display of the radio or navigation system. Additional guidelines help the driver manoeuvre into the space.

Cruise control.
At 18mph and above, the system maintains your chosen preset speed through uphill and downhill inclines. Standard on Commerce Plus and optional on Commerce models.

Tyre pressure monitoring system.[1]
Displays the current pressure for every tyre and warns of deviations from the set pressure.

Driver Alert System.[1]
Uses visual and audible warning signals to recommend that the driver takes a break as soon as it registers driving behaviour that indicates tiredness. Standard on all models.

Road Sign Display.
Detects road signs and informs the driver about the current traffic situation.

Fog lights with cornering function.
Ensures optimum visibility in poor weather conditions. The fog light on the inside of the curve illuminates the roadside when turning.

Hill Descent Assist.[2]
Allows you to descend slopes in a safe, controlled way by regulating the engine speed and applying the brakes as necessary.

Hill Start Assist.
This prevents the vehicle from rolling back on inclines, making it easier to start off on uphill slopes. Standard on all models.

Lane Change Assist – Side Scan.[1]
Side Scan displays a warning signal on the exterior mirror as soon as one of its sensors detects a vehicle in a blind spot during a lane change.

Anti-lock braking system (ABS).[1]
Prevents wheels from locking up and, thus, maintains manoeuvrability. Standard on all models.

Traction control system (ASR).
Prevents wheelspin on poor or unstable surfaces.

Electronic differential lock (EDL).
Distributes the engine torque to the tyres with the greatest traction.

Driver and passenger airbag.
Provides the best possible protection in the event of a frontal impact as a standard feature. A side-head airbag is also available as an option.

Seat belt warning.
If their seat belt is not fastened, the seat belt warning reminds the driver to fasten it with a visual warning when the engine is started, and an audible warning after setting off. Standard on all models.

1 Within the system's thresholds. 2 Only in conjunction with 4MOTION all-wheel drive.
Illustration includes options at extra charge. Please contact your local Volkswagen Commercial Vehicles Van Centre for details of the standard equipment and optional extras available.

The Crafter panel van

Starting from **£37,315†**

Please click here for more details.

The Crafter panel van is distinguished by having even better loadability and load securing than ever before. The dimensions are ideal for transporting Euro pallets and roll containers. The factory-fitted preparation for shelves and cupboards, the optional universal floor and the optional internal roof rack combine to create even greater flexibility in the load compartment.

Highlights of the Crafter panel van

- **Largest load compartment height of up to 2,196mm[1]**
- **Largest side loading and opening width of 1,311mm via the sliding door**

1 Value applies to the Crafter panel van with long wheelbase Maxi, super-high roof and front-wheel drive.
2 In comparison to rear-wheel drive and 4MOTION all-wheel drive.

Illustrations may include options at extra charge. Please contact your local Volkswagen Commercial Vehicles Van Centre for details of the standard equipment and optional extras available.

100mm lower loading sill with the front-wheel drive.[2] Image shown features optional Rear step in rear bumper half width including side marker lights.

Illustrations may include options at extra charge. Please contact your local Volkswagen Commercial Vehicles Van Centre for details of the standard equipment and optional extras available.

Volkswagen Commercial Vehicles may change RRPs at any time (this includes where there are government changes in regulation and/or legislation). There may be a delay to any RRP displaying correctly on our materials. Always obtain prices from your chosen authorised Van Centre. † Basic RRP excluding VAT.

01

Innovative load compartments

- **Preparation for shelving systems**
- **Available with a sturdy, hard-wearing beechwood floor**
  Standard on Commerce Plus and optional on Commerce models
- **Up to 14 high-strength, retractable load-lashing rings**

02

03

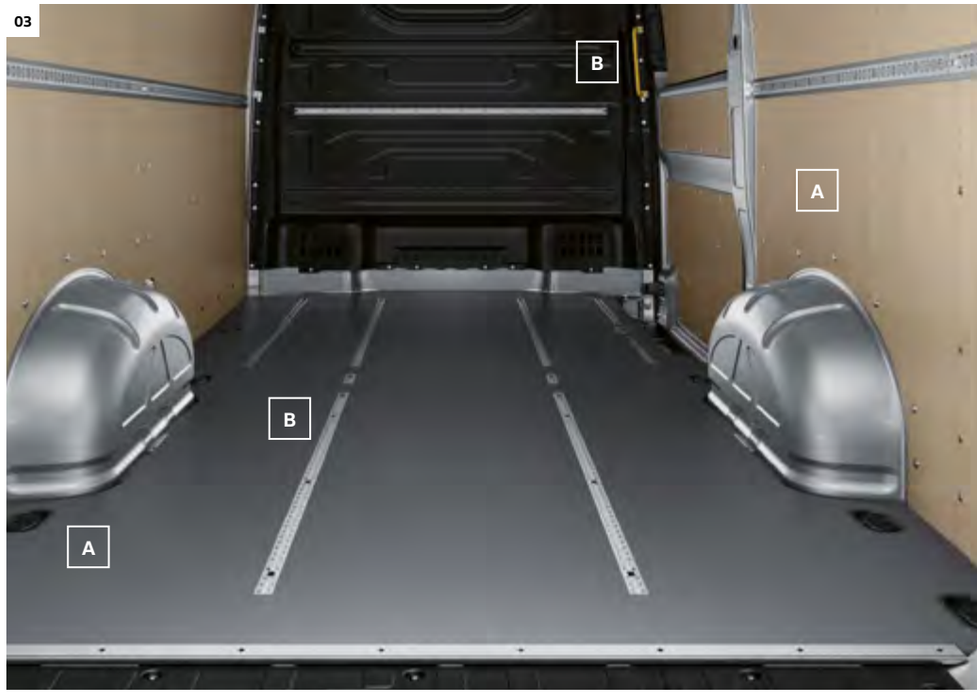

01 Rear wing doors. The two roof-height doors provide an opening angle of 180°. On Commerce Plus models the standard rear wing doors are extended to an increased opening of 270°. The 270° rear wing doors are available as an option on Commerce models.

02 Wooden floor.[2] This 8mm thick wooden floor for the load compartment provides the optimum surface for your cargo to rest on. Robust beechwood ensures outstanding sturdiness and resilience. Standard on Commerce Plus and optional on Commerce models.

03 Universal floor.[1,2] This wooden floor is the ideal basis for retrofitting the shelving and cupboard systems available from a range of manufacturers. Special adapters (A) enable cupboard systems to be easily fastened using the notches. Longitudinal and transverse load-lashing rails (B) are available as an option for the universal floor.

Storage pockets for the rear wing doors (not shown).[1] The removable storage pockets provide a safe and handy storage option for small tools.

Protective grilles for the rear wing doors (not shown).[1] These protect the rear windows against glass breakage and also help to prevent theft.

Up to 14 load-lashing rings (not shown). The Crafter panel van features two additional load-lashing rings on the partition allowing you to securely fasten cargo with tensioning straps and nets. The adjustable load-lashing rings are recessed to lie flush with the floor. To reduce the risk of being a trip hazard, they can also be folded to the sides in the vicinity of the doors.

Preparation for shelving systems (not shown). There are numerous holes for M6 bolts above and below the window area that simplify installation. The holes are spaced 100mm intervals.

1 Optional at extra cost. 2 Will be introduced at a later date. Illustrations may include options at extra charge.
Please contact your local Volkswagen Commercial Vehicles Van Centre for details of the standard equipment and optional extras available.

Easy to load. Loads of space.

Wheelbase.	Medium	Long	Maxi[2]
Seat configurations With 2 or 3 seats		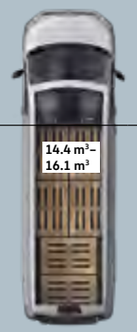	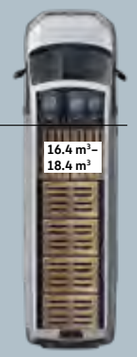
Load compartment[6] with Eur-1 pallets 800 x 1,200mm	9.9 m³–11.3 m³	14.4 m³–16.1 m³	16.4 m³–18.4 m³
Load compartment[6] with Eur-3 pallets 1,000 x 1,200mm	9.9 m³–11.3 m³	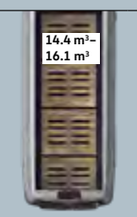 14.4 m³–16.1 m³	16.4 m³–18.4 m³
Load compartment[6] with roll containers 720 x 830mm	9.9 m³–11.3 m³	14.4 m³–16.1 m³	16.4 m³–18.4 m³
Load dimensions	Length: 3,450mm Width: 1,832mm	Length: 4,300mm Width: 1,832mm	Length: 4,855mm Width: 1,832mm

Side sliding door with 1,311mm opening width. Easy to load and unload with common load carriers such as Euro pallets.

High load compartment with up to 2,196mm.[4] In conjunction with front wheel drive, the Crafter panel van offers a competitive load height for its class.

100mm lower load sill. Compared to the rear wheel drive and 4MOTION all-wheel drive, the front wheel drive further simplifies loading and unloading thanks to its lower load sill.

Universal floor for fitting third-party storage systems.[5] The optional wooden floor is the ideal base for fitting your choice of storage system from a range of manufacturers. Special adapters for the notches in the floor deliver the flexibility to add or remove items with ease.

Preparation for shelving systems. Numerous hexagonal holes for M6 screw fittings are located every 100mm within the load area, simplifying the mounting of shelves and storage units.

1 With front wheel drive, RWD single rear wheel and 4MOTION all-wheel drive. 2 Not available with a low roof. 3 Not available in conjunction with a super-high roof.
4 Figures based on the front wheel drive Crafter panel van long wheelbase Maxi with super-high roof. 5 Optional at extra cost. 6 Figures are based on low roof to high roof load volumes/load volume for front-wheel drive.
Illustrations may include options at extra charge. Please contact your local Volkswagen Commercial Vehicles Van Centre for details of the standard equipment and optional extras available.

The Crafter panel van.
Engineered for you.

The Crafter panel van is the perfect basis for specialist conversion due to its robust design. You can find example bodies here, on the following pages and also at www.volkswagen-vans.co.uk/conversions

01

02

02

03

01 Mobility van. The particularly low entry height and front wheel drive provide the optimal basis for the conversion of the Crafter panel van into a vehicle for persons with reduced mobility. Useful features include linear lift or rear lowering.

02 Emergency services vehicle. The Crafter panel van's versatility, with three lengths and heights as well as front wheel drive, rear wheel drive and 4MOTION all-wheel drive make it the ideal base vehicle for this specialist application.

03 Mobile breakdown assistance van. The large cargo space in the Crafter panel van with high roof is ideal for expansion as a mobile workshop.

Upgrade your Crafter Commerce with the discounted Business Pack.

Now you can drive away in an upgraded Volkswagen Crafter panel van for less.

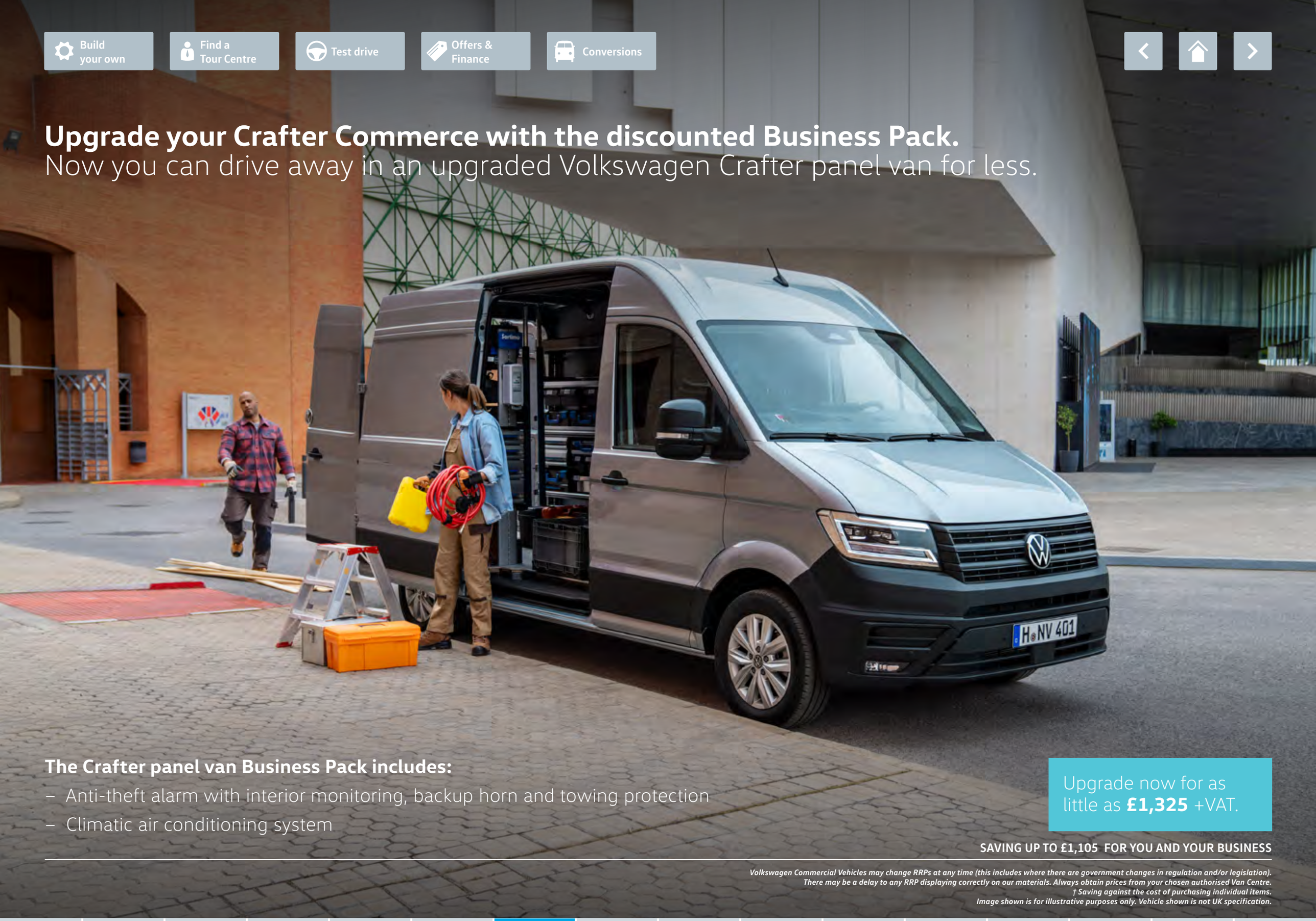

The Crafter panel van Business Pack includes:

- Anti-theft alarm with interior monitoring, backup horn and towing protection
- Climatic air conditioning system

Upgrade now for as little as **£1,325** +VAT.

SAVING UP TO £1,105 FOR YOU AND YOUR BUSINESS

Volkswagen Commercial Vehicles may change RRPs at any time (this includes where there are government changes in regulation and/or legislation). There may be a delay to any RRP displaying correctly on our materials. Always obtain prices from your chosen authorised Van Centre.
† Saving against the cost of purchasing individual items.
Image shown is for illustrative purposes only. Vehicle shown is not UK specification.

Crafter panel van **Commerce**

Starting from **£37,785†**

Please click here for more details.

Standard equipment

Audio and communications

- App Connect
- Composition Colour DAB+ radio with 10.4 inch touch-screen, USB/iPod connection and Bluetooth®

Cab area

- Austin fabric seat covers (Anthracite)
- Dual passenger seat with storage compartment and folding tray in backrest
- Electromechanical Servotronic steering
- Digital cockpit
- Multi-function steering wheel (Leather for Automatic models)
- Overhead storage with two 1-Din slots and reading light
- Rubber floor covering
- Steering wheel with reach and rake adjustment
- USB-C charging port above windscreen
- Wireless mobile phone charging
- 12V socket

Cargo area

- Full-height steel bulkhead without window
- Rear wing doors without window
- Two load-lashing rings on B-pillar

Exterior

- Manually adjustable door mirrors
- 180° rear wing doors. (270° hinges on LWB Maxi)
- 75 litre fuel tank with lockable cap
- Manual side sliding door passenger's side
- Black unpainted bumpers

Safety and security

- Adjustable speed Imiter
- Anti-lock Braking System (ABS)
- Automatic hazard lights activation under emergency braking
- Crosswind Assist
- Daytime running lights with low beam mode (automatic), "Leaving Home" function and manual "Coming Home" function
- Driver Alert System
- Driver and passenger airbags
- Electronic Brake Assist (EBA)
- Electronic Stabilisation Programme (ESP), load adjusting
- Engine immobiliser
- Front and rear parking sensors
- Front Assist with City Emergency Braking System
- Halogen main headlights with separate daytime running lights with automatic headlight control and Coming Home feature
- Lane keeping assist
- Electronic parking brake with hill hold control
- Central locking with Keyless go
- Seat belt warning light for driver
- Speed limiter without cruise control system
- Three-point inertia-reel seatbelts for all seats
- Windshield wiper auto control with light/rain sensor

Wheels and tyres

- 16" x 6.5J steel wheels
- 205/75 R16 C113/111 low rolling resistance
- Full size steel spare wheel
- Tool kit and jack

Additional equipment – Commerce 5.0T GVW models

Exterior

- Double rear wheels
- Rear wheel drive

Safety and security

- Mandatory speed limiter – 56mph
- Smart digital tachograph TCO 2.0

Front Assist with City Emergency Braking System.

Illustrations includes options at extra charge.

Upgrade your Crafter Commerce panel van with a Business Pack and save £1,105.*

- Anti-theft alarm with interior monitoring, back-up horn and towing protection
- Climatic air conditioning system

* Saving against the cost of purchasing individual items.

FOR ONLY **£1,325** + VAT

Find out more

Volkswagen Commercial Vehicles may change RRPs at any time (this includes where there are government changes in regulation and/or legislation). There may be a delay to any RRP displaying correctly on our materials. Always obtain prices from your chosen authorised Van Centre. † Basic RRP excluding VAT
Detailed information regarding tyre efficiency labelling and technical specifications on all potential tyre fitments can be found by visiting the Volkswagen Commercial Vehicles online car configurator at www.volkswagen-vans.co.uk/en/configurator.html

Crafter panel van
Commerce Plus

Starting from **£43,895 †**

Please click here for more details.

Additional equipment – Commerce Plus

Cab area
Anti-theft alarm system - with interior monitoring, backup horn and tow-away protection
Climatic manual air conditioning
Comfort single driver's seat including 2-way lumbar support and armrest
Cruise control with speed limiter
Electrically adjustable and heated door mirrors

Cargo area
Grab handles on rear entry pillars
Load floor cover – wooden

Exterior
Part painted front bumpers
Rear wing doors with 270° hinges

Multi-function steering wheel.

Composition Colour DAB+ radio with 10 inch touch-screen.

Illustrations may include options at extra charge.
Please contact your local Volkswagen Commercial Vehicles Van Centre for details of the standard equipment and optional extras available.

Volkswagen Commercial Vehicles may change RRPs at any time (this includes where there are government changes in regulation and/or legislation). There may be a delay to any RRP displaying correctly on our materials. Always obtain prices from your chosen authorised Van Centre. † Basic RRP excluding VAT.

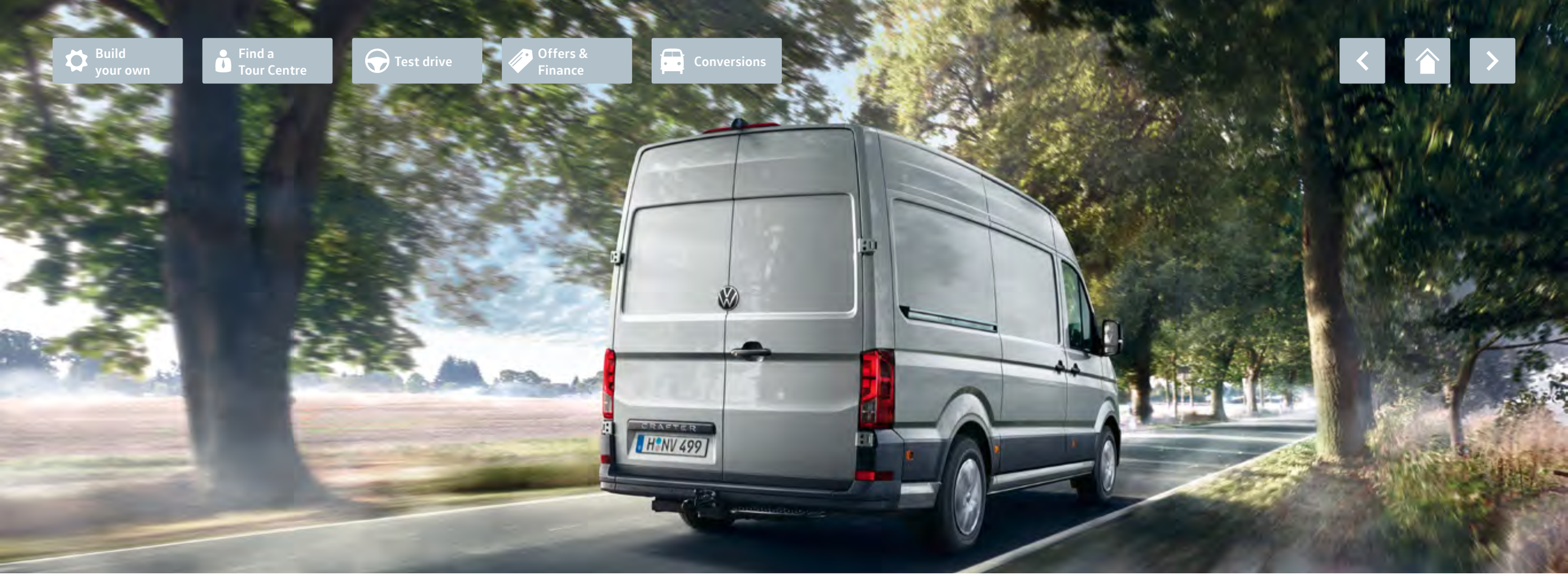

The Crafter panel van model variants.

Panel van	Medium wheelbase	Long wheelbase	Long wheelbase Maxi
Vehicle length	5,986mm	6,836mm	7,391mm
Interior length	3,450mm	4,300mm	4,855mm
Low roof (optional) Vehicle height[1]: 2,355mm Interior height[2]: 1,726mm		---	---
High roof (standard) Vehicle height[1]: 2,590mm Interior height[2]: 1,961mm			
Super-high roof (optional) Vehicle height[1]: 2,798mm Interior height[2]: 2,196mm	---		

1 For front-wheel drive, 4MOTION all-wheel drive, and rear-wheel drive with single tyres. Height dimensions to the road have a tolerance of ± 50mm. 2 Interior height for front-wheel drive.

Illustrations may include options at extra charge. Please contact your local Volkswagen Commercial Vehicles Van Centre for details of the standard equipment and optional extras available.

Paint & upholstery

Candy White. Solid paint finish.

Cherry Red. Solid paint finish.

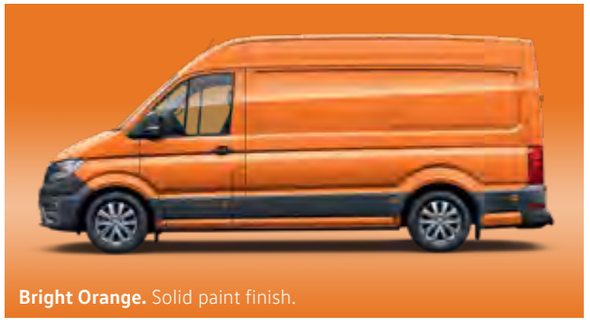
Bright Orange. Solid paint finish.

This bumper is standard on Commerce.

Ascot Grey. Solid paint finish.

Deep Ocean Blue. Solid paint finish.

Oyster Silver[1]. Metallic paint finish.

Part painted bumper now standard on the Commerce Plus.

Indium Grey[1]. Metallic paint finish.

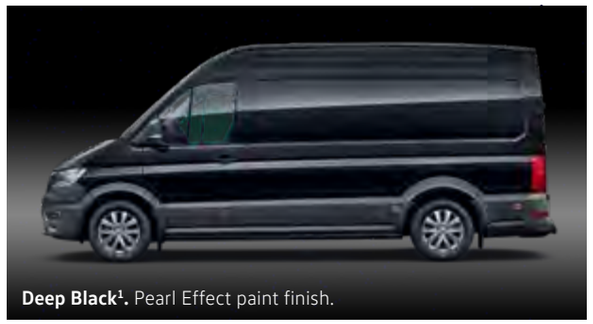
Deep Black[1]. Pearl Effect paint finish.

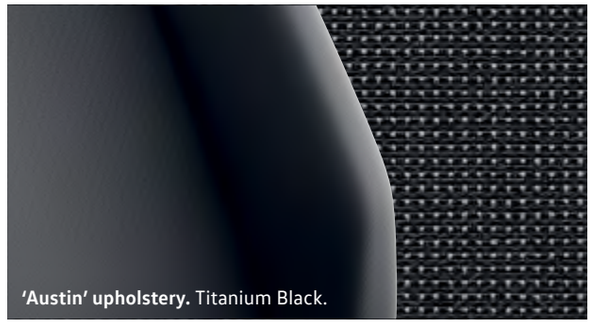
'Austin' upholstery. Titanium Black.

'Memphis' cloth upholstery[1]. Titanium Black.

Robust 'Marathon' upholstery[1] Palladium.

1 Optional at extra cost.

Please note: Screen representations do not allow exact reproduction of paint and upholstery colours.

Illustrations include options at extra charge. Please contact your local Volkswagen Commercial Vehicles Van Centre for details of the standard equipment and optional extras applicable in your country.

Infotainment & connectivity

01

02

01 Composition Colour DAB+ radio system. The Composition Colour DAB+ radio system features a 10 inch touch-screen colour display, two USB (type-C) ports, Bluetooth®, and four speakers delivering 20 watt output. It also features App-Connect, an integrated eSIM and mobile online services as part of We Connect[1] and We Connect Plus[1,2]. Standard on on all Crafter trims. Option to upgrade to include Satellite Navigation.

02 Discover Media satellite navigation system. The optional Discover Media satellite navigation system features an 12 inch colour touch-screen with proximity sensor. The system also includes DAB+, natural voice control, IDA, free map updates via the internet and mobile online services with Volkswagen We Connect Plus[1,2], and wireless App-Connect[3]. Optional on all models.

1 To use We Connect services, you need to have a Volkswagen ID user account, and must log into We Connect with your username and password. In addition, a separate We Connect contract or We Connect Plus contract must be concluded online with Volkswagen AG. For We Connect Plus, you have 90 days from the handover of the vehicle to register the vehicle at www.portal.volkswagen-we.com, and use the services for the full duration of the agreed free period. 2 Free of charge for the first year when you order Composition Colour or Discover Media navigation systems. There is an extra charge in the event of renewal once the free period has expired. 3 Only in conjunction with compatible Apple CarPlay devices on the Discover Media navigation system.

We Connect and We Connect Plus.

Your vehicle's technology, at your fingertips.

With Volkswagen We Connect[1] driving a van will now be even more digital. The We Connect[1] App connects your smartphone to the vehicle with an integrated eSIM card. To take advantage of these exclusive services, you can register today with the We Connect[1] Portal. Once your vehicle has been activated, you can access the full range of Mobile Online Services.

We Connect [1]

BREAKDOWN CALL

In the event of a breakdown, we get to your location quickly. With **'Breakdown Call'**, you can call for breakdown assistance from your vehicle with the press of a button. The system will send your location and vehicle information directly to the AA Call Centre.

PARKING POSITION

The **'Parking Position'** Service shows you where your car is located. If necessary, it can also show you the fastest way of getting to it.

SERVICE SCHEDULING

You drive – Volkswagen **'Service Scheduling'** looks after the rest. As soon as your vehicle's service is due, a notification will automatically be sent to your chosen Volkswagen Van Centre, who will be in touch to book the service appointment with you.

EMERGENCY CALL SERVICE

In the event of a serious accident, you can press the 'eCall' button to speak to the emergency services who will automatically dispatch help to your exact location or, in the event your vehicle is involved in an accident, they will contact you and will automatically dispatch help if you are not able to respond.

We Connect Plus [1,2]

LOCK & UNLOCK

'Lock & Unlock' allows you to control the central locking system of your vehicle – using your smartphone, you can conveniently lock and unlock the doors and luggage compartment.

ONLINE ANTI-THEFT ALARM [3]

Sit back and relax – your vehicle can look after itself. If an attempt is made to break into the car, the **'Online Anti-Theft Alarm'** will inform the We Connect app on your smartphone or by email.

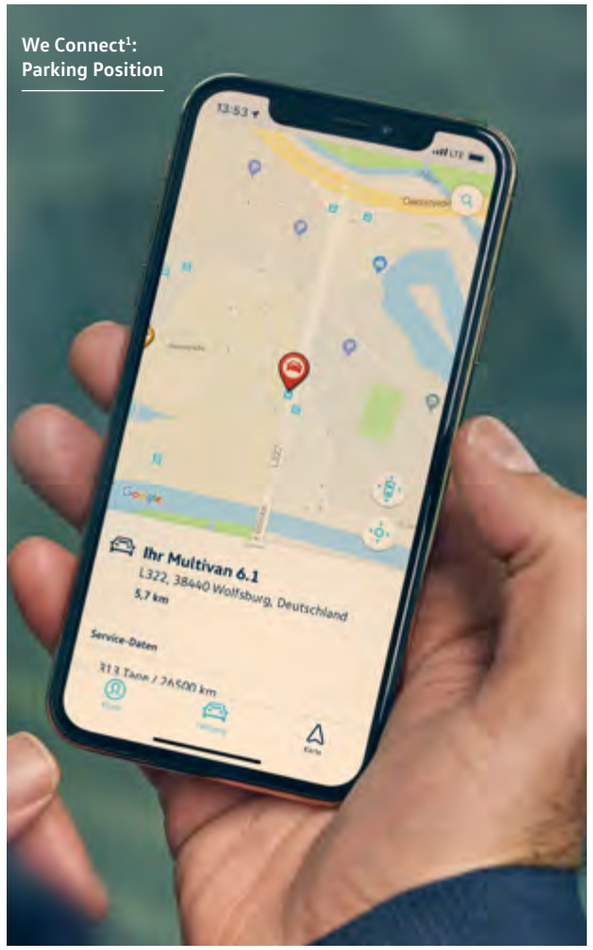

We Connect[1]: Parking Position

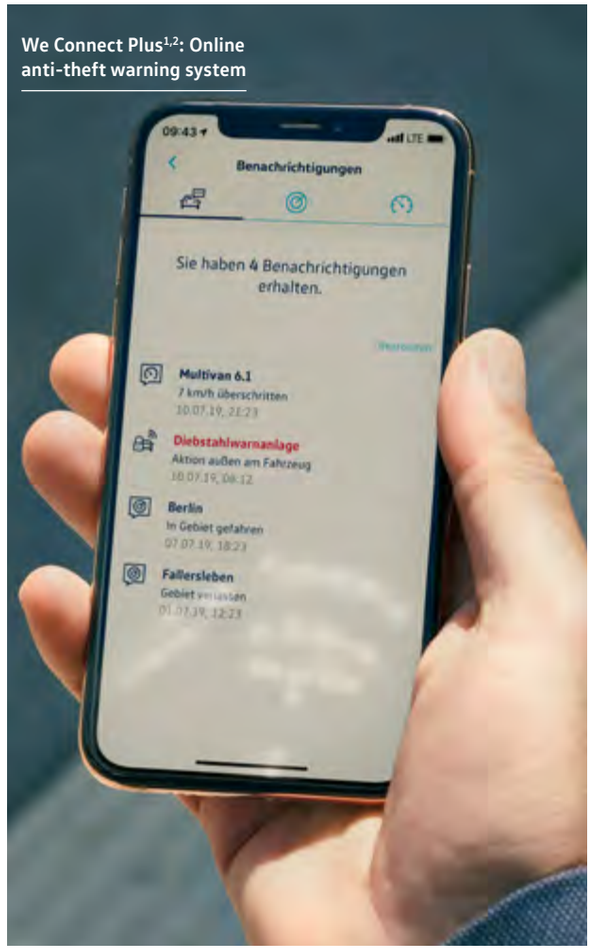

We Connect Plus[1,2]: Online anti-theft warning system

1 To use We Connect services, you need a Volkswagen ID user account and must log in to We Connect with your user name and password. A separate We Connect contract or We Connect Plus contract will also need to be made online with Volkswagen AG. For We Connect Plus you have 90 days after the handover of the vehicle to register the vehicle on www.portal.volkswagen-we.com and can use services free during this time. 2 Free of charge for the first year when you order Composition Colour or Discover Media navigation system. There is an extra charge in the event of renewal once the free period has expired. For the use of the Streaming and Internet based services and for the Wi-Fi hotspot, data packages can be purchased from Cubic Telecom, our mobile communications partner and used in the network coverage area within many European countries. You can find information on prices and supported countries at www.vw.cubictelecom.com 3 For the use of the Streaming and Internet based services and for the Wi-Fi hotspot, data packages can be purchased from Cubic Telecom, our mobile communications partner and used in the network coverage area within many European countries. You can find information on prices and supported countries at www.vw.cubictelecom.com
Images shown are for illustrative purposes only.

We Connect.
Your vehicle's technology, at your fingertips.

We Connect[1]
Automatic Accident Notification
Breakdown call
Doors & Lights
Driving Data
eCall Emergency System
Emergency Call
Parking Position
Service Scheduling
Vehicle Health Report
Vehicle Status

We Connect Plus[1,2]
Filling & Charging Stations
Horn & Turn Signals
Internet Radio
Lock & Unlock
Media Streaming[3]
Online Anti-theft Warning System[3]
Online Map Update[3]
Online Route Calculation[3]
Online Route Search
Online Traffic Information[3]
Online Voice Control
Parking Spaces

	Commerce	Commerce Plus
We Connect	Optional with Composition Colour	–
We Connect Plus – One year subscription	Optional with Composition Colour	Standard[1]
We Connect Plus – Three year's subscription	Optional with Discover Media Navigation	Optional with Discover Media Navigation

1 To use We Connect services, you need a Volkswagen ID user account and must log in to We Connect with your user name and password. A separate We Connect contract or We Connect Plus contract will also need to be made online with Volkswagen AG. For We Connect Plus you have 90 days after the handover of the vehicle to register the vehicle on www.portal.volkswagen-we.com and can use services free during this time. 2 Free of charge for the first year when you order Composition Colour or Discover Media navigation system. There is an extra charge in the event of renewal once the free period has expired. 3 For the use of the Streaming and Internet based services and for the Wi-Fi hotspot, data packages can be purchased from Cubic Telecom, our mobile communications partner and used in the network coverage area within many European countries. You can find information on prices and supported countries at www.vw.cubictelecom.com

Engine & gearbox data

Engine specifications	2.0 TDI 140PS	2.0 TDI 163PS	2.0 TDI 177PS
Mixture preparation/injection method	Common-rail/exhaust-gas turbocharger	Common-rail/exhaust-gas turbocharger	Common-rail/exhaust-gas turbocharger
EU exhaust emission standard – FWD / 4MOTION	EU6d EVAP ISC	–	EU6d EVAP ISC
EU exhaust emission standard – RWD	–	EURO VI-d Heavy Duty	–
Number of cylinders	4	4	4
Cubic capacity	1,968cc	1,968cc	1,968cc
Output, PS at rpm	140 at 3,500-3,600	163 at 3,600	177 at 3,600
Torque, max. Nm at rpm	340 at 1,600-2,250	410 at 1,500-2,000	410 at 1,500-2,000
Fuel tank capacity	75 litres	75 litres	75 litres
AdBlue® tank capacity	18 litres	18 litres	18 litres
Diesel Particulate Filter [DPF]	●	●	●
6-speed manual gearbox	●	●	●
8-speed automatic gearbox	○	○	○
Front-wheel drive	●	–	●
Rear-wheel drive	○	●	–
4MOTION all-wheel drive	○	–	○
Alternator [1]	140 A or 180 A	140 A or 180 A	140 A or 180 A
Battery [2]	92 Ah or 95 Ah	92 Ah or 95 Ah	92 Ah or 95 Ah

● Standard ○ Available – Not available.

1 Alternator rating depends on trimline and additional optional equipment fitted. 2 Battery rating depends on additional optional equipment fitted.

Panel van fuel consumption, performance and emissions

Front wheel drive / 4MOTION Euro 6 RDE2

		RDE2 Compliant	CO_2 emissions,g/km[1], Max. (worst case)	CO_2 emissions,g/km[1], Min. (best case)	Combined fuel consumption mpg[1], Min. (worst case)	Combined fuel consumption mpg[1], Max. (best case)	Combined fuel consumption (ltr/100 km)[1], Max. (worst case)	Combined fuel consumption (ltr/100 km)[1], Min. (best case)	Top speed, mph (where law permits)
Commerce medium wheelbase with high roof									
CR30	2.0 TDI 140PS FWD 6 speed manual	Yes	273 – 225		27.2 – 32.8		10.4 – 8.6		98
CR35	2.0 TDI 140PS FWD 6-speed manual	Yes	279 – 228		26.6 – 32.5		10.6 – 8.7		98
	2.0 TDI 140PS FWD 8-speed automatic	Yes	290 – 247		25.9 – 30.1		10.9 – 9.4		96
	2.0 TDI 177PS 4MOTION 8-speed automatic	Yes	266 – TBC		TBC – 28.0		TBC – 10.1		101
Commerce long wheelbase with high roof									
CR35	2.0 TDI 140PS FWD 6-speed manual	Yes	288 – 231		25.7 – 32.1		11.0 – 8.8		98
	2.0 TDI 140PS FWD 8-speed automatic	Yes	303 – 251		24.4 – 29.4		11.6 – 9.6		96
	2.0 TDI 177PS 4MOTION 8-speed automatic	Yes	269 – TBC		TBC – 27.7		TBC – 10.2		101
Commerce Plus medium wheelbase with high roof									
CR35	2.0 TDI 140PS FWD 6-speed manual	Yes	279 – 230		26.6 – 32.5		10.6 – 8.7		98
	2.0 TDI 140PS FWD 8-speed automatic	Yes	290 – 249		25.9 – 29.7		10.9 – 9.5		96
	2.0 TDI 177PS FWD 6-speed manual	Yes	276 – 243		26.9 – 30.4		10.5 – 9.3		102
	2.0 TDI 177PS FWD 8-speed automatic	Yes	252 – TBC		TBC – 29.4		TBC – 9.6		102
	2.0 TDI 177PS 4MOTION 8-speed automatic	Yes	268 – TBC		TBC – 27.7		TBC – 10.2		101

		RDE2 Compliant	CO_2 emissions,g/km[1], Max. (worst case)	CO_2 emissions,g/km[1], Min. (best case)	Combined fuel consumption mpg[1], Min. (worst case)	Combined fuel consumption mpg[1], Max. (best case)	Combined fuel consumption (ltr/100 km)[1], Max. (worst case)	Combined fuel consumption (ltr/100 km)[1], Min. (best case)	Top speed, mph (where law permits)
Commerce Plus long wheelbase with high roof									
CR35	2.0 TDI 140PS FWD 6-speed manual	Yes	288 – 233		25.7 – 31.7		11.0 – 8.9		98
	2.0 TDI 140PS FWD 8-speed automatic	Yes	303 – 252		24.1 – 29.4		11.7 – 9.6		96
	2.0 TDI 177PS FWD 6-speed manual	Yes	285 – 247		25.9 – 30.1		10.9 – 9.4		102
	2.0 TDI 177PS FWD 8-speed automatic	Yes	255 – TBC		TBC – 29.1		TBC – 9.7		102
	2.0 TDI 177PS 4MOTION 8-speed automatic	Yes	272 – TBC		TBC – 27.4		TBC – 10.3		101
Commerce Plus long wheelbase Maxi with high roof									
CR35	2.0 TDI 140PS FWD 6-speed manual	Yes	289 – 234		25.7 – 31.7		11.0 – 8.9		98
	2.0 TDI 140PS FWD 8-speed automatic	Yes	303 – 255		TBC – 29.1		TBC – 9.7		96
	2.0 TDI 177PS FWD 6-speed manual	Yes	285 – TBC		TBC – TBC		TBC – TBC		102

1 Figures shown are for comparability purposes; only compare fuel consumption and CO_2 figures with other vehicles tested to the same technical procedures. These figures may not reflect real life driving results, which will depend upon a number of factors including the accessories fitted (post-registration), variations in weather, driving styles and vehicle load. Data correct at 01.04.2023. Figures quoted are for a range of configurations (including non-UK) and are subject to change due to ongoing approvals/changes. Please consult your authorised Volkswagen Van Centre for further information.

RDE2 refers to Real Driving Emissions Step 2.

Volkswagen Commercial Vehicles is currently working on further developing the Crafter. Due to the current supply situation with semiconductors and the existing order bank, we cannot deliver Crafter models ordered now before the second quarter of 2024. According to our current plans, we will already be producing the further developed version of the Crafter at this time. As a result, we will not be able to deliver the vehicle illustrated in the configurator, or described in the contract at the time of order. The vehicle supplied will be the further developed model of the Crafter instead. The WLTP (Worldwide Harmonised Light Vehicle Test Procedure) consumption and range of the new Crafter are not yet available and may deviate from the currently stated value for the existing model. Please contact your Van Centre for more information as and when it becomes available.

Panel van fuel consumption, performance and emissions

Rear wheel drive / Euro VI HD

		Combined CO_2 emissions g/km (WLTP)	Combined fuel consumption mpg (ltr/100km)	Top speed, mph (where law permits)
Commerce medium wheelbase with high roof				
CR35	2.0 TDI 163PS RWD 6-speed manual	256	28.8	102
	2.0 TDI 163PS RWD 8-speed automatic	289	25.7	81
CR50	2.0 TDI 163PS RWD 6-speed manual	313	23.7	56
Commerce long wheelbase with high roof				
CR35	2.0 TDI 163PS RWD 6-speed manual	273	27.2	102
	2.0 TDI 163PS RWD 8-speed automatic	289	25.7	99
CR50	2.0 TDI 163PS RWD 6-speed manual	313	23.7	56
Commerce Plus medium wheelbase with high roof				
CR35	2.0 TDI 163PS RWD 6-speed manual	256	28.8	102
	2.0 TDI 163PS RWD 8-speed automatic	289	25.7	81
CR50	2.0 TDI 163PS RWD 6-speed manual	313	23.7	56
	2.0 TDI 163PS RWD 8-speed automatic	332	22.2	56
Commerce Plus long wheelbase with high roof				
CR35	2.0 TDI 163PS RWD 6-Speed manual	273	27.2	102
	2.0 TDI 163PS RWD 8-speed automatic	289	25.7	99
CR50	2.0 TDI 163PS RWD 6-speed manual	313	23.7	56
	2.0 TDI 163PS RWD 8-Speed automatic	332	22.2	56
Commerce Plus long wheelbase Maxi with high roof				
CR50	2.0 TDI 163PS RWD 6-speed manual	TBC	TBC	56
	2.0 TDI 163PS RWD 8-speed automatic	332	22.2	56

Working with you

The Crafter panel van offers professional transport solutions for all: we promise to work with you to tailor your new Crafter panel van and optimise the payload for your individual business requirements. Simply call your local Van Centre directly to discuss your needs.

Panel van weights

						Commerce		Commerce Plus	
Engine/transmission		**Gross vehicle weight[1], kg**	**Axle load limit, front/rear, kg**	**Trailer weight braked 12%/ unbraked, kg**	**Gross train weight, kg**	**Unladen weight[2], kg**	**Payload[3], kg**	**Unladen weight[2], kg**	**Payload[3], kg**
Medium wheelbase panel van with high roof									
CR30	2.0 TDI 140PS FWD 6-speed manual	3,000	1,800 / 2,100	3,000 / 750	6,000	2,271	729	–	–
CR35	2.0 TDI 140PS FWD 6-speed manual	3,500	1,800 / 2,100	3,000 / 750	6,000	2,271	1,229	2,329	1,171
	2.0 TDI 140PS FWD 8-speed automatic	3,500	1,800 / 2,100	3,000 / 750	6,000	2,303	1,197	2,484	1,016
	2.0 TDI 163PS RWD 6-speed manual	3,500	1,800 / 2,250	3,500 / 750	7,000	2,361	1,139	2,420	1,080
	2.0 TDI 163PS RWD 8-speed automatic	3,500	1,800 / 2,250	3,500 / 750	7,000	–	–	2,457	1,043
	2.0 TDI 177PS FWD 6-speed manual	3,500	1,800 / 2,100	3,000 / 750	6,000	–	–	2,338	1,162
	2.0 TDI 177PS FWD 8-speed automatic	3,500	1,800 / 2,100	3,000 / 750	6,000	–	–	2,370	1,130
	2.0 TDI 177PS 4MOTION 8-speed automatic	3,500	1,800 / 2,100	3,000 / 750	6,000	2,439	1,061	2,497	1,003
CR50	2.0 TDI 163PS RWD 6-speed manual	5,000	2,200 / 3,500	3,500 / 750	8,000	2,590	2,410	–	–
	2.0 TDI 163PS RWD 6-speed manual	5,000	2,200 / 3,500	3,500 / 750	8,000	–	–	2,648	2,352
	2.0 TDI 163PS RWD 8-speed automatic	5,000	2,200 / 3,500	3,500 / 750	8,000	–	–	2,693	2,307

1 We are currently changing over to the new vehicle testing regime known as the Worldwide Harmonised Light Vehicle Test Procedure (WLTP). This is being phased in for Light Commercial Vehicles (LCVs) and replaces the New European Driving Cycle (NEDC) test procedure for establishing the official fuel consumption and CO_2 emissions figures for new vehicles. WLTP applies to all vehicle manufacturers. If you order an LCV now, it is likely to have different official fuel consumption, CO_2 emissions data and specification to that shown in the configurator. For more information, please speak to your local authorised Van Centre. Comparisons may be unreliable.
Other factors including Gross Vehicle Weight, trimline, extra equipment, options and accessories (wheels, tyres, etc.) may change vehicle parameters such as the weight, rolling resistance of the tyres and the aerodynamics and thus influence the fuel consumption, CO_2 emissions and driving performance values.
2 Unladen weight includes approximately 90% fuel load and 75kg for driver.
3 Payload = gross vehicle weight minus unladen weight. Quoted weights are for vehicles with standard specification. Unladen weight and payload may be influenced by trimline, factory options and Van Centre fitted accessories.
The minimum payload range includes base specification vehicle. Payload can be improved by removal of standard equipment e.g. spare wheel, wooden floor or replacement of twin passenger seat with a single seat. Please contact your local Volkswagen Van Centre for more details.

Panel van weights (continued)

Engine/transmission		Gross vehicle weight[1], kg	Axle load limit, front/rear, kg	Trailer weight braked 12%/ unbraked, kg	Gross train weight, kg	Commerce: Unladen weight[2], kg	Commerce: Payload[3], kg	Commerce Plus: Unladen weight[2], kg	Commerce Plus: Payload[3], kg
Long wheelbase panel van with high roof									
CR35	2.0 TDI 140PS FWD 6-speed manual	3,500	1,800 / 2,100	3,000 / 750	6,000	2,383	1,117	2,453	1,047
	2.0 TDI 140PS FWD 8-speed automatic	3,500	1,800 / 2,100	3,000 / 750	6,000	2,410	1,090	2,483	1,017
	2.0 TDI 163PS RWD 6-speed manual	3,500	1,800 / 2,250	3,500 / 750	7,000	2,477	1,023	2,547	953
	2.0 TDI 163PS RWD 8-speed automatic	3,500	1,800 / 2,250	3,500 / 750	7,000	–	–	2,588	912
	2.0 TDI 177PS FWD 6-speed manual	3,500	1,800 / 2,100	3,000 / 750	6,000	–	–	2,462	1,038
	2.0 TDI 177PS FWD 8-speed automatic	3,500	1,800 / 2,100	3,000 / 750	6,000	–	–	2,492	1,008
	2.0 TDI 177PS 4MOTION 8-speed automatic	3,500	2,100 / 2,100	3,000 / 750	6,000	2,619	881	2,619	881
CR50	2.0 TDI 163PS RWD 6-speed manual	5,000	2,200 / 3,500	3,500 / 750	8,000	2,700	2,300	–	–
	2.0 TDI 163PS RWD 6-speed manual	5,000	2,200 / 3,500	3,500 / 750	8,000	–	–	2,769	2,231
	2.0 TDI 163PS RWD 8-speed automatic	5,000	2,200 / 3,500	3,500 / 750	8,000	–	–	2,815	2,185
Long wheelbase Maxi with high roof									
CR35	2.0 TDI 140PS FWD 6-speed manual	3,500	1,800 / 2,100	3,000 / 750	6,000	–	–	2,512	988
	2.0 TDI 140PS FWD 8-speed automatic	3,500	1,800 / 2,100	3,000 / 750	6,000	–	–	2,544	956
	2.0 TDI 177PS FWD 6-speed manual	3,500	1,800 / 2,100	3,000 / 750	6,000	–	–	2,522	978
CR50	2.0 TDI 163PS RWD 6-speed manual	5,000	2,200 / 3,500	3,500 / 750	8,000	–	–	2,858	2,142
	2.0 TDI 163PS RWD 8-speed automatic	5,000	2,200 / 3,500	3,500 / 750	8,000	–	–	2,894	2,106

1 We are currently changing over to the new vehicle testing regime known as the Worldwide Harmonised Light Vehicle Test Procedure (WLTP). This is being phased in for Light Commercial Vehicles (LCVs) and replaces the New European Driving Cycle (NEDC) test procedure for establishing the official fuel consumption and CO_2 emissions figures for new vehicles. WLTP applies to all vehicle manufacturers. If you order an LCV now, it is likely to have different official fuel consumption, CO_2 emissions data and specification to that shown in the configurator. For more information, please speak to your local authorised Van Centre. Comparisons may be unreliable.
Other factors including Gross Vehicle Weight, trimline, extra equipment, options and accessories (wheels, tyres, etc.) may change vehicle parameters such as the weight, rolling resistance of the tyres and the aerodynamics and thus influence the fuel consumption, CO_2 emissions and driving performance values.
2 Unladen weight includes approximately 90% fuel load and 75kg for driver.
3 Payload = gross vehicle weight minus unladen weight. Quoted weights are for vehicles with standard specification. Unladen weight and payload may be influenced by trimline, factory options and Van Centre fitted accessories.
The minimum payload range includes base specification vehicle. Payload can be improved by removal of standard equipment e.g. spare wheel, wooden floor or replacement of twin passenger seat with a single seat. Please contact your local Volkswagen Van Centre for more details.

Panel van dimensions

CR30/35 medium wheelbase

Roof height		**Low[1] (optional)**	**High[1] (standard)**
Wheelbase		3,640	3,640
Load compartment	length, mm	3,450/3,201**	3,450/3,201**
	width, mm	1,832	1,832
	width between wheel arches, mm	1,380	1,380
	height, mm (FWD/RWD & 4MOTION)	1,726/1,626	1,961/1,861
	load volume, m^3 (FWD/RWD & 4MOTION)	9.9/9.3	10.7/9.3
Side sliding door	width, mm	1,311	1,311
	height, mm	1,587	1,822
Rear wing doors	width, mm	1,552	1,552
	height, mm	1,605	1,840
Turning circle (wall to wall), m		13.6	13.6

All dimensions in millimetres (mm), unless otherwise stated.
1 CR30 and CR35: RWD & 4MOTION derivatives have a lower internal load height due to a raised floor (by 100mm).

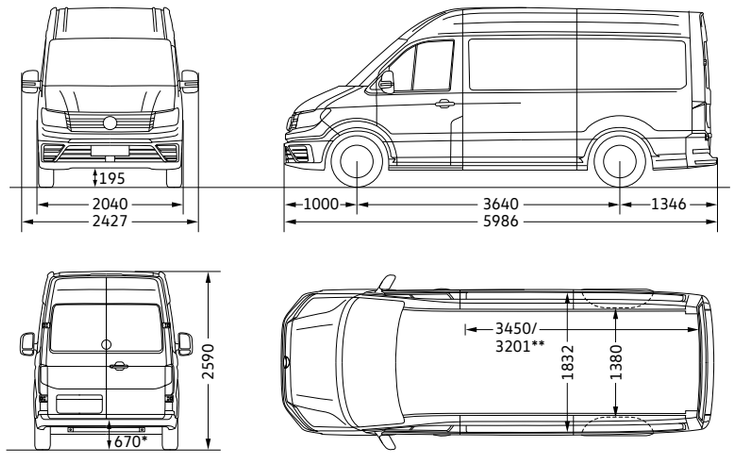

Illustration shown is CR35 medium wheelbase panel van with high roof.
* This value applies for RWD & 4MOTION all-wheel drive.
**Load compartment length, max. (at floor level)/load compartment length, min.

CR35 long wheelbase

Roof height		**High[1] (standard)**	**Super-high[1] (optional)**
Wheelbase		4,490	4,490
Load compartment	length, mm	4,300/4,051**	4,300/4,051**
	width, mm	1,832	1,832
	width between wheel arches, mm	1,380	1,380
	height, mm (FWD/RWD & 4MOTION)	1,961/1,861	2,189/2,089
	load volume, m^3 (FWD/RWD & 4MOTION)	14.4/13.6	16.1/15.3
Side sliding door	width, mm	1,311	1,311
	height, mm	1,822	1,822
Rear wing doors	width, mm	1,552	1,552
	height, mm	1,840	1,840
Turning circle (wall to wall), m		16.2	16.2

All dimensions in millimetres (mm), unless otherwise stated.
1 CR35: RWD & 4MOTION derivatives have a lower internal load height due to a raised floor (by 100mm).

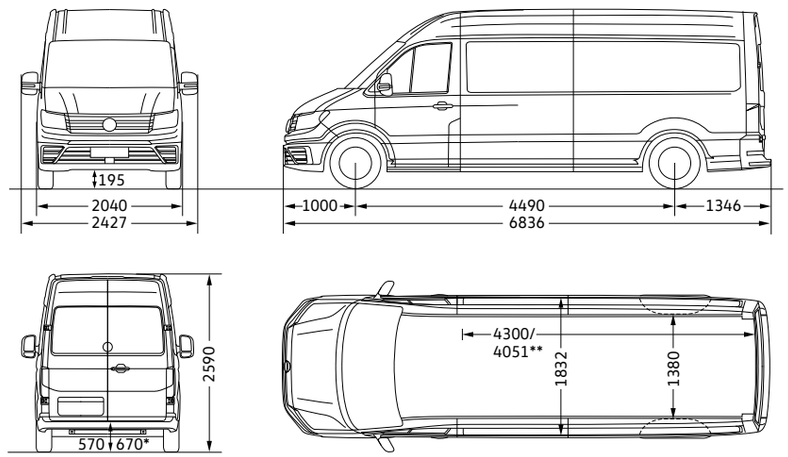

Illustration shown is CR35 long wheelbase panel van with high roof.
* On high roof models, this value applies for RWD & 4MOTION all-wheel drive and rear-wheel drive.
On super-high roof models, this value applies for RWD & 4MOTION all-wheel drive only.
**Load compartment length, max. (at floor level)/load compartment length, min.

Please note: all measurements listed are based on series vehicles. The loading sill and height dimensions listed here may vary by approximately ±50 mm depending on the equipment fitted and load. The vehicle drawings are not to scale.

Panel van dimensions (continued)

CR35 long wheelbase Maxi

Roof height		**High[1] (standard)**	**Super-high[1] (optional)**
Wheelbase		4,490	4,490
Load compartment	length, mm	4,855/4,606**	4,855/4,606**
	width, mm	1,832	1,832
	width between wheel arches, mm	1,380	1,380
	height, mm (FWD/RWD & 4MOTION)	1,961/1,861	2,196/2,096
	load volume, m^3 (FWD/RWD & 4MOTION)	16.4/15.5	18.4/17.5
Side sliding door	width, mm	1,311	1,311
	height, mm	1,822	1,822
Rear wing doors	width, mm	1,552	1,552
	height, mm	1,840	1,840
Turning circle (wall to wall), m		16.2	16.2

All dimensions in millimetres (mm), unless otherwise stated.
1 CR35: RWD & 4MOTION derivatives have a lower internal load height due to a raised floor (by 100mm).

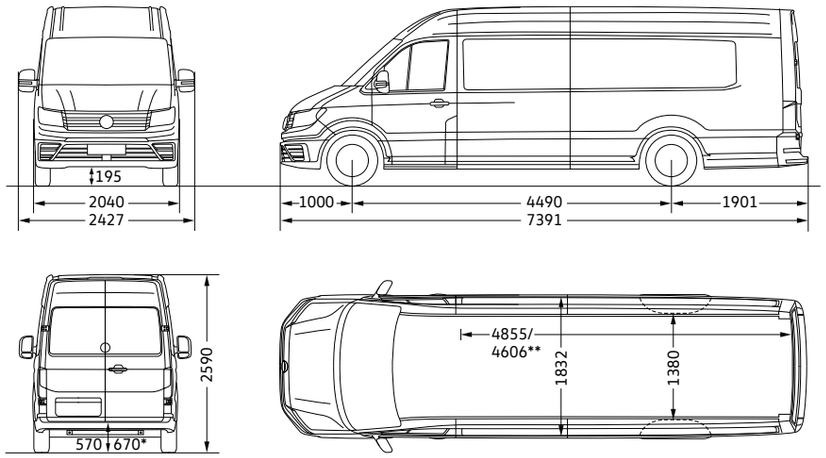

Illustration shown is CR35 long wheelbase Maxi with high roof.
* This value applies for RWD & 4MOTION all-wheel drive.
**Load compartment length, max. (at floor level)/load compartment length, min.

CR50 medium wheelbase

Roof height		**High (standard)**
Wheelbase		3,640
Load compartment	length, mm	3,450/3,201*
	width, mm	1,832
	width between wheel arches, mm	1,030
	height, mm	1,861
	load volume, m^3	13.6
Side sliding door	width, mm	1,311
	height, mm	1,722
Rear wing doors	width, mm	1,552
	height, mm	1,740
Turning circle (wall to wall), m		16.2

All dimensions in millimetres (mm), unless otherwise stated.

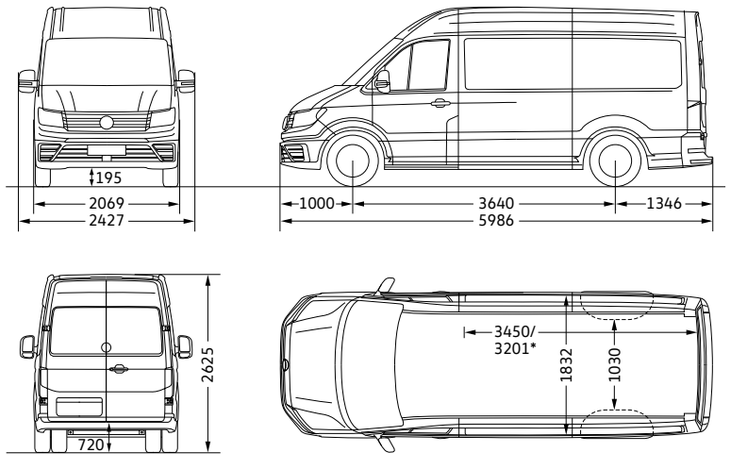

Illustration shown is CR50 medium wheelbase with high roof.
* Load compartment length, max. (at floor level)/load compartment length, min.

Please note: all measurements listed are based on series vehicles. The loading sill and height dimensions listed here may vary by approximately ±50 mm depending on the equipment fitted and load. The vehicle drawings are not to scale.

Panel van dimensions (continued)

CR50 long wheelbase

Roof height		**High (standard)**	**Super-high (optional)**
Wheelbase		4,490	4,490
Load compartment	length, mm	4,300/4,051*	4,300/4,051*
	width, mm	1,832	1,832
	width between wheel arches, mm	1,030	1,030
	height, mm	1,861	2,089
	load volume, m^3	13.6	15.3
Side sliding door	width, mm	1,311	1,311
	height, mm	1,722	1,722
Rear wing doors	width, mm	1,552	1,552
	height, mm	1,740	1,740
Turning circle (wall to wall), m		16.2	16.2

All dimensions in millimetres (mm), unless otherwise stated.

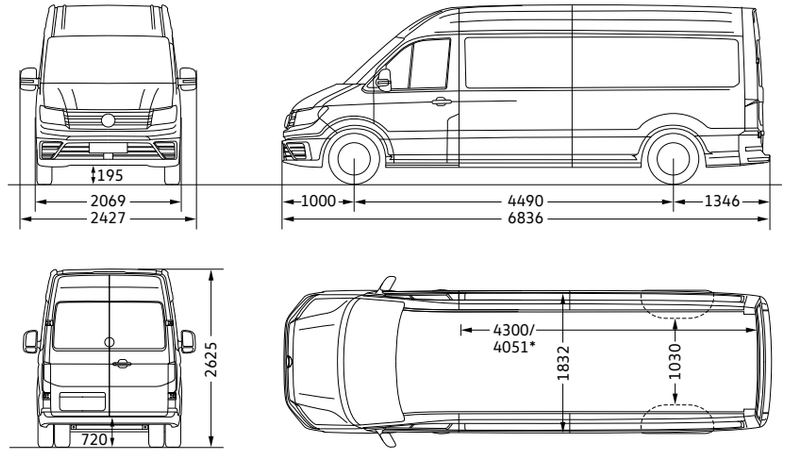

Illustration shown is CR50 long wheelbase with high roof.
* Load compartment length, max. (at floor level)/load compartment length, min.

CR50 long wheelbase Maxi

Roof height		**High (standard)**	**Super-high (optional)**
Wheelbase		4,490	4,490
Load compartment	length, mm	4,855/4,606*	4,855/4,606*
	width, mm	1,832	1,832
	width between wheel arches, mm	1,030	1,030
	height, mm	1,861	2,096
	load volume, m^3	15.5	17.5
Side sliding door	width, mm	1,311	1,311
	height, mm	1,722	1,722
Rear wing doors	width, mm	1,552	1,552
	height, mm	1,740	1,740
Turning circle (wall to wall), m		16.2	16.2

All dimensions in millimetres (mm), unless otherwise stated.

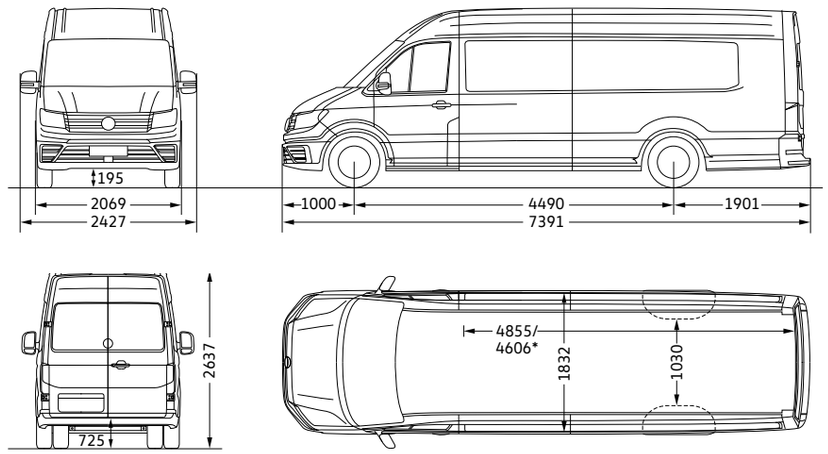

Illustration shown is CR50 long wheelbase Maxi with high roof.
* Load compartment length, max. (at floor level)/load compartment length, min.

Please note: all measurements listed are based on series vehicles. The loading sill and height dimensions listed here may vary by approximately ±50 mm depending on the equipment fitted and load. The vehicle drawings are not to scale.

Model prices

***Manufacturer's on the road (OTR) package**

Model	CR30 and CR35	CR50
Delivery to Van Centre	£835.00	£835.00
Number plates	£20.00	£20.00
VAT	£171.00	£171.00
First registration fee	£55.00	£55.00
Road Fund Licence (12 Months)	£360.00	£177.00
Basic OTR price (exc. VAT)	**£1,270.00**	**£1,087.00**
Total OTR price (inc. VAT)	£1,441.00	£1,258.00

Volkswagen Commercial Vehicles may change RRPs at any time (this includes where there are government changes in regulation and/or legislation). There may be a delay to any RRP displaying correctly on our materials. Always obtain prices from your chosen authorised Van Centre.

Panel van model prices

Trimline	Engine/transmission/drive system	Basic exc. VAT	Total inc. VAT	Total RRP inc. OTR* exc. VAT	Total RRP inc. OTR* inc. VAT
Commerce medium wheelbase with high roof					
CR30	2.0 TDI 140PS FWD 6-speed manual	**£37,875.00**	£45,450.00	**£39,145.00**	£46,891.00
CR35	2.0 TDI 140PS FWD 6-speed manual	**£41,285.00**	£49,542.00	**£42,555.00**	£50,983.00
	2.0 TDI 140PS FWD 8-speed automatic	**£43,475.00**	£52,170.00	**£44,745.00**	£53,611.00
	2.0 TDI 177PS 4MOTION 8-speed automatic	**£52,820.00**	£63,384.00	**£54,090.00**	£64,825.00
	2.0 TDI 163PS RWD 6-speed manual	**£42,950.00**	£51,540.00	**£44,220.00**	£52,981.00
	2.0 TDI 163PS RWD 8-speed automatic	**£45,140.00**	£54,168.00	**£46,410.00**	£55,609.00
CR50	2.0 TDI 163PS RWD 6-speed manual	**£46,400.00**	£55,680.00	**£47,487.00**	£56,938.00
Commerce long wheelbase with high roof					
CR35	2.0 TDI 140PS FWD 6-speed manual	**£43,135.00**	£51,762.00	**£44,405.00**	£53,203.00
	2.0 TDI 140PS FWD 8-speed automatic	**£45,325.00**	£54,390.00	**£46,595.00**	£55,831.00
	2.0 TDI 177PS 4MOTION 8-speed automatic	**£54,670.00**	£65,604.00	**£55,940.00**	£67,045.00
	2.0 TDI 163PS RWD 6-speed manual	**£44,800.00**	£53,760.00	**£46,070.00**	£55,201.00
	2.0 TDI 163PS RWD 8-speed automatic	**£46,990.00**	£56,388.00	**£48,260.00**	£57,829.00
CR50	2.0 TDI 163PS RWD 6-speed manual	**£48,250.00**	£57,900.00	**£49,337.00**	£59,158.00
Commerce Plus medium wheelbase with high roof					
CR35	2.0 TDI 140PS FWD 6-speed manual	**£43,895.00**	£52,674.00	**£45,165.00**	£54,115.00
	2.0 TDI 140PS FWD 8-speed automatic	**£46,085.00**	£55,302.00	**£47,355.00**	£56,743.00
	2.0 TDI 177PS FWD 6-speed manual	**£46,105.00**	£55,326.00	**£47,375.00**	£56,767.00
	2.0 TDI 177PS FWD 8-speed automatic	**£48,295.00**	£57,954.00	**£49,565.00**	£59,395.00
	2.0 TDI 177PS 4MOTION 8-speed automatic	**£55,430.00**	£66,516.00	**£56,700.00**	£67,957.00
	2.0 TDI 163PS RWD 6-Speed manual	**£45,560.00**	£54,672.00	**£49,020.00**	£56,113.00
	2.0 TDI 163PS RWD 8-speed automatic	**£47,750.00**	£57,300.00	**£46,830.00**	£58,741.00
CR50	2.0 TDI 163PS RWD 6-speed manual	**£49,010.00**	£58,812.00	**£50,097.00**	£60,070.00
	2.0 TDI 163PS RWD 8-speed automatic	**£51,200.00**	£61,440.00	**£52,287.00**	£62,698.00

* Please **click here** for more details on manufacturer's on the road (OTR) package.

Volkswagen Commercial Vehicles may change RRPs at any time (this includes where there are government changes in regulation and/or legislation). There may be a delay to any RRP displaying correctly on our materials. Always obtain prices from your chosen authorised Van Centre.

Panel van model prices (continued)

Trimline	Engine/transmission/drive system	Basic exc. VAT	Total inc. VAT	Total RRP inc. OTR* exc. VAT	Total RRP inc. OTR* inc. VAT
Commerce Plus long wheelbase with high roof					
CR35	2.0 TDI 140PS FWD 6-speed manual	**£45,745.00**	£54,894.00	**£47,015.00**	£56,335.00
	2.0 TDI 140PS FWD 8-speed automatic	**£47,935.00**	£57,522.00	**£49,205.00**	£58,963.00
	2.0 TDI 177PS FWD 6-speed manual	**£47,955.00**	£57,546.00	**£49,225.00**	£58,987.00
	2.0 TDI 177PS FWD 8-speed automatic	**£50,145.00**	£60,174.00	**£51,415.00**	£61,615.00
	2.0 TDI 177PS 4MOTION 8-speed automatic	**£57,280.00**	£68,736.00	**£58,550.00**	£70,177.00
	2.0 TDI 163PS RWD 6-Speed manual	**£47,410.00**	£56,892.00	**£48,680.00**	£58,333.00
	2.0 TDI 163PS RWD 8-speed automatic	**£49,600.00**	£59,520.00	**£50,870.00**	£60,961.00
CR50	2.0 TDI 163PS RWD 6-Speed manual	**£50,860.00**	£61,032.00	**£51,947.00**	£62,290.00
	2.0 TDI 163PS RWD 8-Speed automatic	**£53,050.00**	£63,660.00	**£54,137.00**	£64,918.00
Commerce Plus long wheelbase Maxi with high roof					
CR35	2.0 TDI 140PS FWD 6-speed manual	**£46,845.00**	£56,214.00	**£48,115.00**	£57,655.00
	2.0 TDI 140PS FWD 8-speed automatic	**£49,035.00**	£58,842.00	**£50,305.00**	£60,283.00
	2.0 TDI 177PS FWD 6-speed manual	**£49,055.00**	£58,866.00	**£50,325.00**	£60,307.00
CR50	2.0 TDI 163PS RWD 6-speed manual	**£51,960.00**	£62,352.00	**£53,047.00**	£63,610.00
	2.0 TDI 163PS RWD 8-speed automatic	**£54,150.00**	£64,980.00	**£55,237.00**	£66,238.00

* Please **click here** for more details on manufacturer's on the road (OTR) package.

Volkswagen Commercial Vehicles may change RRPs at any time (this includes where there are government changes in regulation and/or legislation). There may be a delay to any RRP displaying correctly on our materials. Always obtain prices from your chosen authorised Van Centre.

Panel van options

Paint	PR Code	Van	Commerce Basic exc. VAT	Commerce Total RRP inc. VAT	Commerce Plus Basic exc. VAT	Commerce Plus Total RRP inc. VAT
Solid. Bright Orange (E3E3)[1], Candy White (B4B4), Cherry Red (4B4B), Deep Ocean (0P0P), Ascot Grey (6U6U).	As shown	Panel van	○	○	○	○
Metallic. Indium Grey (X3X3), Oyster Silver (F0F0).	As shown	Panel van	£1,310.00	£1,572.00	£1,310.00	£1,572.00
Pearl effect. Deep Black (2T2T).	As shown	Panel van	£1,410.00	£1,692.00	£1,410.00	£1,692.00
Customised. Please contact your local Van Centre for availability.	–	Panel van	From £645.00	From £774.00	From £645.00	From £774.00
Interior trim						
Seat trim covers in Austin fabric. Seats in Titanium Black/dashboard upper-lower in Titanium Black-Palladium/flooring in Pearl Grey.	N0L	Panel van	●	●	●	●
Seat trim covers in Memphis fabric. Seats in Titanium Black/dashboard upper-lower in Titanium Black-Palladium/flooring in Pearl Grey.	N2C	Panel van	£25.00	£30.00	£25.00	£30.00
Seat trim covers in Leatherette - Mesh. Seats in Palladium-Titanium Black/dashboard upper-lower Titanium Black-Palladium/ floor covering in Pearl Grey.	N0C	Panel van	£55.00	£66.00	£55.00	£66.00
Seat trim covers in Robust fabric						
Palladium-Titanium Black/Titanium Black- Palladium/Pearl Grey.	AS	Panel van	○	○	○	○
Titanium Black/Titanium Black-Palladium/ Pearl Grey.	AL	Panel van	○	○	○	○
Seating						
Dual passenger seat in cab with storage compartment and folding tray in backrest.	3TS	Panel van	●	●	●	●
Basic single driver's seat.	3SH	Panel van	●	●	–	–
Basic single passenger seat.	3TH	Panel van	-£180.00	-£216.00	–	–
Comfort single driver's seat. With longitudinal seat adjustment, adjustable backrest, height adjustment, 2-way lumbar support, adjustable seat cushion angle and a single armrest on the inner side.	3SE	Panel van	£220.00	£264.00	●	●
Comfort single passenger seat.	3TE	Panel van	-£110.00	-£132.00	-£110.00	-£132.00
Comfort plus single driver's seat. With longitudinal seat adjustment, adjustable backrest, height adjustment, 4-way electronic lumbar support, adjustable seat cushion angle and two armrests.	3SF	Panel van	–	–	£90.00	£108.00

● Standard – Not available ○ At no extra cost

Where additional equipment is required by chosen options, this will be at additional cost. See the relevant option for recommended pricing or consult your local authorised Van Centre.

1 Bright Orange – this comes without the standard painted trim panel in the bumper.

Volkswagen Commercial Vehicles may change RRPs at any time (this includes where there are government changes in regulation and/or legislation). There may be a delay to any RRP displaying correctly on our materials. Always obtain prices from your chosen authorised Van Centre.

Panel van options (continued)

Seating (continued)	PR Code	Van	Commerce Basic exc. VAT	Commerce Total RRP inc. VAT	Commerce Plus Basic exc. VAT	Commerce Plus Total RRP inc. VAT
Comfort plus single passenger seat. With longitudinal seat adjustment, adjustable backrest, height adjustment, 4-way electronic lumbar support, adjustable seat cushion angle and two armrests.	3TF	Panel van	–	–	-£55.00	-£66.00
ergoComfort driver's seat.	3SP	Panel van	–	–	£370.00	£444.00
ergoComfort passenger seat.	3TP	Panel van	–	–	£245.00	£294.00
ergoActive driver's seat. Including massage function.	3SK	Panel van	–	–	£445.00	£534.00
Heated driver's & front passenger seats.	4A3	Panel van	£370.00	£444.00	£370.00	£444.00
Swivelling drivers seat.	3SD	Panel van	£445.00	£534.00	–	–
Swivelling drivers seat.	3SD	Panel van	–	–	£230.00	£276.00
Swivelling passenger seat.	3TD	Panel van	£15.00	£18.00	£15.00	£18.00
Without passenger seat.	3TA	Panel van	-£220.00	-£264.00	–	–
Without passenger seat but with low seat substructure.	3TI	Panel van	-£175.00	-£210.00	–	–

Wheel and tyre accessories

16" steel wheels. 6.5J x 16 with 1,050kg load in Black.	C1G	Panel van	○	○	○	○
Alloy wheel 17" (6.5J x 17) - Silver. FWD / Motion only. Requires 1GB Breakdown kit.	PR7	Panel van	£1,440.00	£1,728.00	£1,440.00	£1,728.00
Alloy wheel 17" (6.5J x 17) - Black. FWD / Motion only. Requires 1GB Breakdown kit.	PR8	Panel van	£1,440.00	£1,728.00	£1,440.00	£1,728.00
All-weather tyres. Only for FWD & 4Motion.	VG1	Panel van	£215.00	£258.00	£215.00	£258.00
Lockable wheel bolts.	1PB	Panel van	£25.00	£30.00	£25.00	£30.00
Tyre mobility kit in lieu of spare wheel. Includes 12V compressor and tyre sealant.	1G8	Panel van	○	○	○	○
Wheel Trims.	1ND	Panel van	£75.00	£90.00	£75.00	£90.00
Tyres 235/65 R16 C115/113 R, low rolling resistance.	Q70	Panel van	○	○	○	○

● Standard – Not available ○ At no extra cost

Where additional equipment is required by chosen options, this will be at additional cost. See the relevant option for recommended pricing or consult your local authorised Van Centre.
Detailed information regarding tyre efficiency labelling and technical specifications on all potential tyre fitments can be found by visiting the Volkswagen Commercial Vehicles online car configurator at www.volkswagen-vans.co.uk/en/configurator.html

Volkswagen Commercial Vehicles may change RRPs at any time (this includes where there are government changes in regulation and/or legislation). There may be a delay to any RRP displaying correctly on our materials. Always obtain prices from your chosen authorised Van Centre.

Panel van options (continued)

Audio and communications	PR Code	Van	Commerce Basic exc. VAT	Commerce Total RRP inc. VAT	Commerce Plus Basic exc. VAT	Commerce Plus Total RRP inc. VAT
E-Call + We Connect Basic preparation.	R22	Panel van	●	●	●	●
Composition Colour with 6.5" touch-screen including We Connect Plus preparation. Radio Composition 10" touch-colour-display (I8U), Without navigation, 8RE: 4 speakers (7Q0), USB Type-C data & charging ports with increased charging power (U9E), "Comfort" mobile phone interface with inductive charging function, without external antenna connection (9ZV).	Z65	Panel van	●	●	●	●
Discover Media Navigation system with 10" touch-screen - Including We Connect Plus preparation. Infotainment (MIB3 MP) execution 1 (10'' touch-colour-display) (8DF), Navigation system (7UY), 4 speakers (8RE), USB Type-C data &charging ports with increased charging power (U9E), "Comfort" mobile phone interface with inductive charging function, without external antenna connection (9ZV).	Z67	Panel van	£895.00	£1,074.00	£895.00	£1,074.00
Discover Media Navigation system with 12" touch-screen with streaming and internet - Including We Connect Plus preparation. Infotainment (MIB3 MP) execution 2 (12'' touch-color-display) (8DG), Navigation system (7UY), 4 speakers (8RE), USB Type-C data and charging ports with increased charging power (U9E), "Comfort" mobile phone interface with external antenna connection (9IJ), Voice control (QH1), Wired & Wireless App-Connect (9WJ).	Z68	Panel van	–	–	£1,535.00	£1,842.00
Voice assitant IDA. Requires Z67 Discover Media Navigation.	QH1	Panel van	○	○	○	○
DAB Digital Radio.	QV3	Panel van	●	●	●	●

Comfort and convenience

Business pack. Includes KH6 Climatic air con and 7AQ Alarm system.	W57	Panel van	£1,3250.00	£1,590.00	–	–
Grab handles on rear entry pillars. A vertical grab handle is installed on the D-pillars on the left and right-hand side of the load/passenger compartment.	7C3	Panel van	£50.00	£60.00	●	●
Glove compartment - illuminated with lockable lid.	4Z3	Panel van	●	●	●	●
Heated washer nozzles in front (windscreen).	8X3	Panel van	£45.00	£54.00	£45.00	£54.00
Lights & Vision pack A. Includes auto-dimming rear-view mirror (if fitted), automatic headlights with daytime running lights (9I5) (automatically swithces on headlights in low light conditions).	ZA3	Panel van	£150.00	£180.00	£150.00	£180.00
Lights & Vision pack B. Includes auto-dimming rear-view mirror (if fitted), automatic headlights with daytime running lights (9I5), high beam assist (8G1) (automatically activates dip & main beam in response to oncoming traffic).	ZLS	Panel van	£390.00	£468.00	£390.00	£468.00
Overhead cab storage. Accessible from load compartment.	7N4	Panel van	£160.00	£192.00	£160.00	£192.00
Overhead storage compartment with two 1-DIN slot and reading light.	QE4	Panel van	●	●	●	●

● Standard – Not available ○ At no extra cost

Where additional equipment is required by chosen options, this will be at additional cost. See the relevant option for recommended pricing or consult your local authorised Van Centre.

Volkswagen Commercial Vehicles may change RRPs at any time (this includes where there are government changes in regulation and/or legislation). There may be a delay to any RRP displaying correctly on our materials. Always obtain prices from your chosen authorised Van Centre.

Panel van options (continued)

Driver assistance (continued)	PR Code	Van	Commerce Basic exc. VAT	Commerce Total RRP inc. VAT	Commerce Plus Basic exc. VAT	Commerce Plus Total RRP inc. VAT
Storage package 1: overhead storage compartment with one 1-DIN slot and reading light (only with 2nd evaporator).	QE1	Panel van	£145.00	£174.00	£145.00	£174.00
High Beam Assist.	8G1	Panel van	£155.00	£186.00	£155.00	£186.00
Step illumination - with on/off control.	9N2	Panel van	£55.00	£66.00	£55.00	£66.00
Body and chassis						
Basic assisatance package. Electronic cruise control system (8T2), Speed limiter and predictive speed limiter (LT2).	PVA	Panel van	£280.00	£336.00	●	●
Advanced assistance package. Adaptive cruise control - with stop/go for Automatic trans (8T3), Semi-auto driving assistance, Travel Assist incl. Lane Assist (6I2), Speed limiter and predictive speed limiter (LT2). NB: Manual trans requires 2FM steering wheel upgrade.	PVD	Panel van	£1,125.00	£1,350.00	–	–
Advanced assistance package. Adaptive cruise control - with stop/go for Automatic trans (8T3), Semi-auto driving assistance, Travel Assist incl. Lane Assist (6I2), Speed limiter and predictive speed limiter (LT2). NB: Manual trans requires 2FM steering wheel upgrade.	PVD	Panel van	–	–	£780.00	£936.00
Extended assistance. Replaces 6XP/ZSA & ZTA. Assistance Lane keeping, Lane change, Rear traffic alert (7Y1), Blind spot monitor with moving off assistance (BR3). NB: requires 6XP Powerfold mirrors.	PVE	Panel van	£1,125.00	£1,350.00	£1,125.00	£1,350.00
Professional assistance package. Replaces 9X1 Side protection. Parking sensors - front and rear with park assist (7X5), Without emergency steering support with turn assist (4G2).	PVF	Panel van	£460.00	£552.00	£460.00	£552.00
Front fog lights with cornering function.	8WH	Panel van	–	–	£270.00	£324.00
LED headlights with separate LED daytime running lights.	8IT	Panel van	£1,075.00	£1,290.00	£1,075.00	£1,290.00
Preparation for rear-view camera.	KA8	Panel van	–	–	£35.00	£42.00
Rear view camera system type 2.	KA2	Panel van	£280.00	£336.00	£280.00	£336.00
Crosswind Assist. As part of the Electronic Stabilisation Programme (ESP), Crosswind Assist applies adaptive braking intervention when the vehicle encounters a strong crosswind.	KJ1	Panel van	●	●	●	●
Multi function steering. Standard on Manual trans.	2FB	Panel van	●	●	●	●
Leather wrapped multi function steering wheel - heated. Option on Manual trans.	2FM	Panel van	£325.00	£390.00	£325.00	£390.00
Leather wrapped multi function steering wheel with Tiptronic. Standard on Automatic trans.	2FE	Panel van	●	●	●	●
Leather wrapped multi function steering wheel with Tiptronic - heated. Option on Automatic trans.	2FT	Panel van	£135.00	£162.00	£135.00	£162.00

● Standard – Not available ○ At no extra cost

Where additional equipment is required by chosen options, this will be at additional cost. See the relevant option for recommended pricing or consult your local authorised Van Centre.

Volkswagen Commercial Vehicles may change RRPs at any time (this includes where there are government changes in regulation and/or legislation). There may be a delay to any RRP displaying correctly on our materials. Always obtain prices from your chosen authorised Van Centre.

Panel van options (continued)

Body and chassis	PR Code	Van	Commerce Basic exc. VAT	Commerce Total RRP inc. VAT	Commerce Plus Basic exc. VAT	Commerce Plus Total RRP inc. VAT
Driver door, reinforced (hinge).	0D3	Panel van	£60.00	£72.00	£60.00	£72.00
Power take-off of transmission without lock and flange.	0R1	Panel van	£990.00	£1,188.00	£990.00	£1,188.00
Half painted front bumper.	2JF	Panel van	–	–	●	●
Fuel tank with a volume of 63 litres. Not available on 4Motion.	0M3	Panel van	○	○	○	○
Front axle - heavy duty (CR35 2,100kg, CR50 2,200kg load).	VV8	Panel van	£280.00	£336.00	£280.00	£336.00
Fuel tank with a volume of 75 litres.	0M0	Panel van	●	●	●	●
Heated windows in rear wing doors.	4HH	Panel van	£325.00	£390.00	£325.00	£390.00
Manual side sliding door driver's side.	5R2	Panel van	£665.00	£798.00	£665.00	£798.00
Manual side sliding door driver's side.	5R2	Panel van	○	○	○	○
Manual side sliding door passenger side.	5Q2	Panel van	●	●	●	●
Manual side sliding door passenger side with increased gap and latching position.	5Q5	Panel van	£80.00	£96.00	£80.00	£96.00
Mudflaps - front and rear.	6N2	Panel van	£110.00	£132.00	£110.00	£132.00
Rear step in rear bumper - full width. Not compatible with towbar or towing prep. MWB: forces side marker lights (8F1).	QT4	Panel van	£240.00	£288.00	£240.00	£288.00
Rear step in rear bumper half width. Only in combination with towbar or towing prep. MWB requires side marker lights.	QT9	Panel van	£145.00	£174.00	£145.00	£174.00
Rear wing doors with 270° hinges. Standard on LWB Maxi.	5V4	Panel van	£305.00	£366.00	●	●
Rear wing doors with windows.	ZHF	Panel van	£155.00	£186.00	£155.00	£186.00
Rear wing doors without windows.	3RD	Panel van	●	●	●	●
Rear wash-wipe including rear wing doors with windows.	4HS	Panel van	£430.00	£516.00	£430.00	£516.00
Roof - low. MWB only.	3R0	Panel van	-£460.00	-£552.00	-£460.00	-£552.00
Roof - super high in white. LWB.	ZD3	Panel van	£1,290.00	£1,548.00	£1,290.00	£1,548.00
Roof - super high in white. LWB Maxi.	ZD3	Panel van	£1,350.00	£1,620.00	£1,350.00	£1,620.00
Roof - super high in body colour exterior only. LWB.	2S2	Panel van	£1,800.00	£2,160.00	£1,800.00	£2,160.00
Roof - super high in body colour exterior only. LWB Maxi.	2S2	Panel van	£2,035.00	£2,442.00	£2,035.00	£2,442.00

● Standard – Not available ○ At no extra cost

Where additional equipment is required by chosen options, this will be at additional cost. See the relevant option for recommended pricing or consult your local authorised Van Centre.

Volkswagen Commercial Vehicles may change RRPs at any time (this includes where there are government changes in regulation and/or legislation). There may be a delay to any RRP displaying correctly on our materials. Always obtain prices from your chosen authorised Van Centre.

Panel van options (continued)

Body and chassis (continued)	PR Code	Van	Commerce Basic exc. VAT	Commerce Total RRP inc. VAT	Commerce Plus Basic exc. VAT	Commerce Plus Total RRP inc. VAT
Rotating emergency light preparation.	9LX	Panel van	£40.00	£48.00	£40.00	£48.00
Indicators - high level, rear only.	9H1	Panel van	£150.00	£180.00	£150.00	£180.00
Run Lock.	7U4	Panel van	£600.00	£720.00	£600.00	£720.00
Side marker lights. Standard on LWB and LWB Maxi.	8F1	Panel van	£90.00	£108.00	£90.00	£108.00
Suspension and shock absorbers, uprated heavy-duty stabilizers.	1BJ	Panel van	£190.00	£228.00	£190.00	£228.00
Suspension and shock absorbers, uprated heavy-duty stabilizer.	2MG	Panel van	£320.00	£384.00	£320.00	£384.00
Towbar - fixed.	1D1	Panel van	£675.00	£810.00	£675.00	£810.00
Towbar - preparation with bracket socket and cable.	1D8	Panel van	£550.00	£660.00	£550.00	£660.00
Towbar - preparation with socket.	1D7	Panel van	£230.00	£276.00	£230.00	£276.00
Wing mirrors: electrically heated and adjustable.	6XN	Panel van	–	–	●	●
Wing mirrors: heated, power adjustable and power folding.	6XP	Panel van	£315.00	£378.00	£315.00	£378.00
Without passenger side sliding door including manual side sliding door driver's side with interlock						
Without passenger side sliding door including manual side sliding door passenger side.	5Q0	Panel van	○	○	○	○
Differential Lock. 4Motion only.	1Y4	Panel van	£650.00	£780.00	£650.00	£780.00
Cargo						
Bulkhead - deleted - removal of bulkhead forces 7AA wich forces SAFELOCK on Commerce Plus.	ZT0	Panel van	○	○	○	○
Bulkhead (steel) - full height without window.	3CF	Panel van	●	●	●	●
Bulkhead - full height with lining without window.	3CS	Panel van	£235.00	£276.00	£235.00	£276.00
LED lights in load compartment (4 lights).	9CW	Panel van	£245.00	£294.00	£245.00	£294.00
Load floor cover - wooden MWB.	5BD	Panel van	£485.00	£582.00	£485.00	£582.00
Load floor cover - wooden LWB.	5BD	Panel van	£565.00	£678.00	£565.00	£678.00
Load floor cover - wooden LWB Maxi.	5BD	Panel van	£650.00	£780.00	£650.00	£780.00

● Standard – Not available ○ At no extra cost

Where additional equipment is required by chosen options, this will be at additional cost. See the relevant option for recommended pricing or consult your local authorised Van Centre.

Volkswagen Commercial Vehicles may change RRPs at any time (this includes where there are government changes in regulation and/or legislation). There may be a delay to any RRP displaying correctly on our materials. Always obtain prices from your chosen authorised Van Centre.

Panel van options (continued)

Cargo (continued)	PR Code	Van	Commerce Basic exc. VAT	Commerce Total RRP inc. VAT	Commerce Plus Basic exc. VAT	Commerce Plus Total RRP inc. VAT
Load side lining - hardboard half height- MWB.	5DE	Panel van	£385.00	£462.00	£385.00	£462.00
Load side lining - hardboard half height - LWB. Not available for LWB Maxi.	5DE	Panel van	£435.00	£522.00	£435.00	£522.00
Load side lining - plywood full height - MWB. The load/passenger compartment is fitted with plywood trim up to the roof on the side panels, the rear-wing doors and the load compartment sliding doors.	5DU	Panel van	£770.00	£924.00	£770.00	£924.00
Load side lining - plywood full height - LWB.	5DU	Panel van	£970.00	£1,164.00	£970.00	£1,164.00
Load side lining - plywood full height - LWB Maxi.	5DU	Panel van	£1,125.00	£1,350.00	£1,125.00	£1,350.00
Load lashing rings.	6B1	Panel van	●	●	●	●
Load lashing rings - deleted.	6B0	Panel van	○	○	○	○
Roof lining - in cab and load/passenger compartment, a moulded fibrous fleece interior roof lining. Only in combination with certain rear window configurations please build on the configurator for your customers requirements.	5CE	Panel van	£675.00	£810.00	£675.00	£810.00
Without rear side trim panel passenger load compartment.	5DA	Panel van	●	●	●	●
Without floor covering in load compartment. Option to remove load floor cover on Commerce Plus.	5BA	Panel van	●	●	-£215.00	-£258.00
Preparation for emergency exit (roof mounted).	3JN	Panel van	£80.00	£96.00	£80.00	£96.00

Electrical

Two 12-V outlets in the cab (in the dashboard).	EU1	Panel van	●	●	●	●
Four 12-V outlets in the cab.	EU4	Panel van	£60.00	£72.00	£60.00	£72.00
12V outlets in load compartment (one at the C-pillar and one at the D-pillar).	7B3	Panel van	£60.00	£72.00	£60.00	£72.00
AGM battery (95 Ah, 520 A) starter battery upgrade.	NY5	Panel van	£105.00	£126.00	£105.00	£126.00
AGM battery (95 Ah, 520 Ah) and stronger generator (250A).	NY4	Panel van	£335.00	£402.00	£335.00	£402.00
Acoustic warning when reverse gear is engaged, deactivatable.	IL2	Panel van	£300.00	£360.00	£300.00	£360.00
AGM battery (92 Ah, 520 A) starter battery upgrade.	NY2	Panel van	£45.00	£54.00	£45.00	£54.00
Forced CFCU.	IS4	Panel van	£340.00	£408.00	£340.00	£408.00
Forced CFCU and Telematics preparation.	IS6	Panel van	£600.00	£720.00	£600.00	£720.00

● Standard – Not available ○ At no extra cost

Where additional equipment is required by chosen options, this will be at additional cost. See the relevant option for recommended pricing or consult your local authorised Van Centre.

Volkswagen Commercial Vehicles may change RRPs at any time (this includes where there are government changes in regulation and/or legislation). There may be a delay to any RRP displaying correctly on our materials. Always obtain prices from your chosen authorised Van Centre.

Panel van options (continued)

Electrical (continued)	PR Code	Van	Commerce Basic exc. VAT	Commerce Total RRP inc. VAT	Commerce Plus Basic exc. VAT	Commerce Plus Total RRP inc. VAT
Second AGM battery with cut-off relay 92Ah 520A. This option is only in combination various different Terminal blocks and functions controls at an additional cost.	8FB	Panel van	£365.00	£438.00	£365.00	£438.00
Second AGM battery with cut-off relay and battery monitoring 92Ah 520A. This option is only in combination various different Terminal blocks and functions controls at an additional cost.	8FE	Panel van	£420.00	£504.00	£420.00	£504.00
Second battery with cut-off relay and battery monitoring 95Ah 450A. This option is only in combination various different Terminal blocks and functions controls at an additional cost.	8FK	Panel van	£420.00	£504.00	£420.00	£504.00
Preparation for Tachograph - Smart digital.	9NF	Panel van	£715.00	£858.00	£715.00	£858.00
Tachograph - digital (Smart TCO 2.0). Standard onCR40 & CR50. A tachograph is installed in the additional console mounted on the dashboard. Data such as the driven speeds, driving and rest periods are saved on the instrument's internal driver card. A driver card must be inserted into the device for use.	9NI	Panel van	£715.00	£858.00	£715.00	£858.00
Deactivation of Transport mode.	2A7	Panel van	○	○	○	○
CFCU Preparation.	IP4	Panel van	●	●	●	●
Terminal block.	IS1	Panel van	£80.00	£96.00	£80.00	£96.00
Basic CFCU with terminal block and bodybuilder configuration.	IS2	Panel van	£420.00	£504.00	£420.00	£504.00
Basic CFCU with terminal block and telematics preparation. Includes bodybuilder configuration.	IS3	Panel van	£675.00	£810.00	£675.00	£810.00
MAX CFCU with terminal block and bodybuilder configuration.	IS7	Panel van	£450.00	£540.00	£450.00	£540.00
MAX CFCU with terminal block, telematics preparation and bodybuilder configuration.	IS8	Panel van	£720.00	£864.00	£720.00	£864.00
DPF regeneration switch. Forces CFCU.	9HC	Panel van	£230.00	£276.00	£230.00	£276.00
Speed regulator, electronic and variable.	US2	Panel van	£160.00	£192.00	£160.00	£192.00

● Standard – Not available ○ At no extra cost

Where additional equipment is required by chosen options, this will be at additional cost. See the relevant option for recommended pricing or consult your local authorised Van Centre.
Detailed information regarding tyre efficiency labelling and technical specifications on all potential tyre fitments can be found by visiting the Volkswagen Commercial Vehicles online car configurator at www.volkswagen-vans.co.uk/en/configurator.html

Volkswagen Commercial Vehicles may change RRPs at any time (this includes where there are government changes in regulation and/or legislation). There may be a delay to any RRP displaying correctly on our materials. Always obtain prices from your chosen authorised Van Centre.

Panel van options (continued)

Heating and ventilation	PR Code	Van	Commerce Basic exc. VAT	Commerce Total RRP inc. VAT	Commerce Plus Basic exc. VAT	Commerce Plus Total RRP inc. VAT
Climatic air conditioning in the cab. The manual "Climatic" air conditioning system offers the following functions: Temperature control, continuously adjustable. The blower speed can be set in 4 different levels (level 0: blower and Climatic is switched off, level 4: highest blower speed). Air distribution in four zones, continuously adjustable (windscreen, windscreen and footwell, footwell, head and upper body area). Air recirculation mode. Defrost function: air is distributed over the interior surface of the windscreen to clear the fogged or iced-up windscreen as quickly as possible. AC: cooling mode can be switched on or off.	KH6	Panel van	£1,680.00	£2,016.00	●	●
2nd heater core and 2nd evaporator.	6AD	Panel van	£1,655.00	£1,986.00	£1,655.00	£1,986.00
Water auxiliary heater - with programmable parking heater and remote control. Fuel-powered auxiliary heater (water) to de-ice the windscreen and heat up the cab. Starting time can be programmed in the vehicle and the remote control can also be used for a direct start. Max 5kW.	7VL	Panel van	£1,080.00	£1,296.00	£1,080.00	£1,296.00
Air Care Climatronic - climate controil air conditioning. Climatronic with impact pressure control (9AK), CFC-free, Second heater core and second evaporator (6AD), Seperate daytime running light with auto headlight control and auto Coming and Leaving Home feature (9I5), Storage package 1: overhead storage compartment with one 1-DIN slot and reading light (only with 2nd evaporator) (QE1) runtime is 120 minutes. In addition to the auxiliary heating function, heating assist mode is also possible while the vehicle is in motion. It heats up the cab and engine significantly more quickly after a cold start.	PK4	Panel van	£3,655.00	£4,386.00	£3,655.00	£4,386.00
Air heater.	7VB	Panel van	£1,485.00	£1,782.00	£1,485.00	£1,782.00

Safety and security						
Airbags - side and curtain for driver.	4X6	Panel van	£865.00	£1,038.00	£865.00	£1,038.00
Airbags - side and curtain for driver and front passenger.	4X3	Panel van	£1,020.00	£1,224.00	£1,020.00	£1,224.00
2 remote control folding keys.	8QJ	Panel van	●	●	●	●
4 remote control folding keys.	8QL	Panel van	£75.00	£90.00	£75.00	£90.00
Speed limiter 55mph.	7H1	Panel van	£110.00	£132.00	£110.00	£132.00
Speed limiter 62mph.	7H2	Panel van	£110.00	£132.00	£110.00	£132.00
Speed limiter 74mph.	7H3	Panel van	£110.00	£132.00	£110.00	£132.00

● Standard – Not available ○ At no extra cost

Where additional equipment is required by chosen options, this will be at additional cost. See the relevant option for recommended pricing or consult your local authorised Van Centre.

Volkswagen Commercial Vehicles may change RRPs at any time (this includes where there are government changes in regulation and/or legislation). There may be a delay to any RRP displaying correctly on our materials. Always obtain prices from your chosen authorised Van Centre.

Panel van options (continued)

Windows	PR Code	Van	Commerce Basic exc. VAT	Commerce Total RRP inc. VAT	Commerce Plus Basic exc. VAT	Commerce Plus Total RRP inc. VAT
Heated windscreen.	4GX	Panel van	–	–	£270.00	£324.00
Side window - Fixed in passenger compartment centre passenger side.	6VH	Panel van	£160.00	£192.00	£160.00	£192.00
Side window - Fixed in passenger compartment centre driver side.	6WH	Panel van	£160.00	£192.00	£160.00	£192.00
Side window - Fixed in passenger compartment front passenger side.	4DE	Panel van	£160.00	£192.00	£160.00	£192.00
Side window - Fixed in passenger compartment front driver side.	4EE	Panel van	£160.00	£192.00	£160.00	£192.00
Side window - Fixed in passenger compartment rear passenger side.	4FH	Panel van	£160.00	£192.00	£160.00	£192.00
Side window - Fixed in passenger compartment rear driver side. Only in combination with windows on the passenger side.	4JH	Panel van	£160.00	£192.00	£160.00	£192.00
Side window - Sliding in passenger compartment front passenger side.	4DM	Panel van	£370.00	£444.00	£370.00	£444.00
Side window - Sliding in passenger compartment front driver side.	4EM	Panel van	£370.00	£444.00	£370.00	£444.00

● Standard – Not available ○ At no extra cost

Where additional equipment is required by chosen options, this will be at additional cost. See the relevant option for recommended pricing or consult your local authorised Van Centre.

Volkswagen Commercial Vehicles may change RRPs at any time (this includes where there are government changes in regulation and/or legislation). There may be a delay to any RRP displaying correctly on our materials. Always obtain prices from your chosen authorised Van Centre.

Accessories

100% safety and security. 100% Volkswagen.

Add extra security, protection and practicality to your new Crafter, while still keeping it 100% Volkswagen. Our range of rugged and long-lasting Accessories are a perfect match for fit and allow you to truly customise your vehicle. Whether you want added technology or need extra flexibility with a sturdy towbar, there's something in our Accessories range for you. And remember, most Accessories include a two-year warranty for added peace-of-mind.

Illustrations may include options at extra charge.
Please contact your local Volkswagen Commercial Vehicles Van Centre for details of the standard equipment and optional extras available.

Want to discover more?
Pop into your nearest Van Centre or call **0800 717 131.**

Finance made simple

As dedicated to finance as we are to your new Crafter panel van

Learn more about our range of finance products to find a finance package that suits your budget.
Alternatively, 'Click on' the Offers & Finance button above to find out more about our latest offers to help your business thrive.

Cost of your vehicle

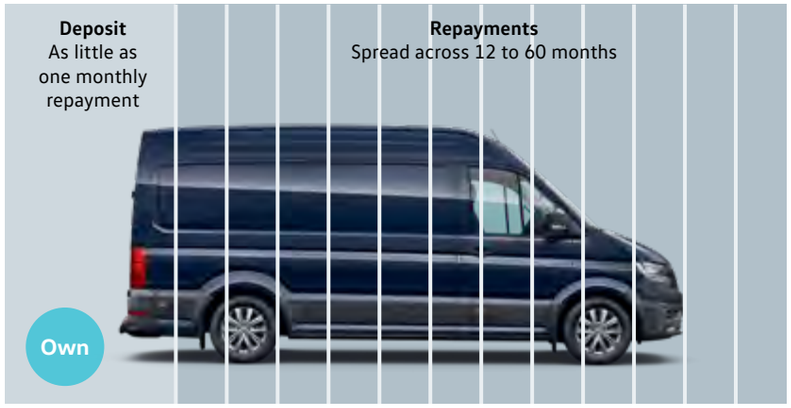

Hire Purchase

Make all the regular monthly payments. At the end the vehicles is yours.

Cost of your vehicle

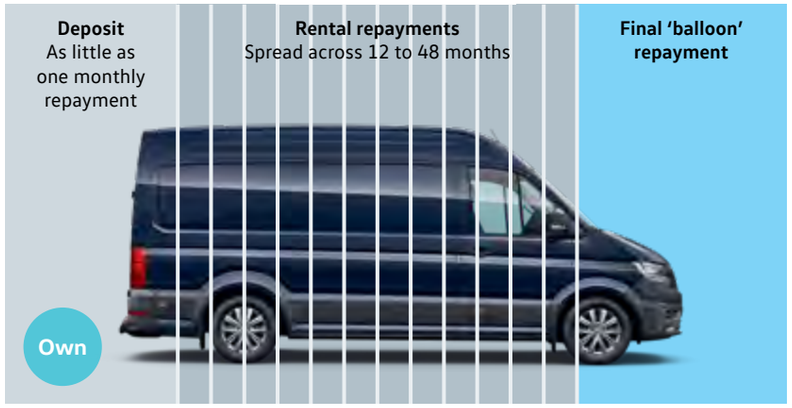

Lease Purchase

Make lower monthly payments by deferring an amount until the end. Once paid the vehicle is yours.

Cost of your vehicle

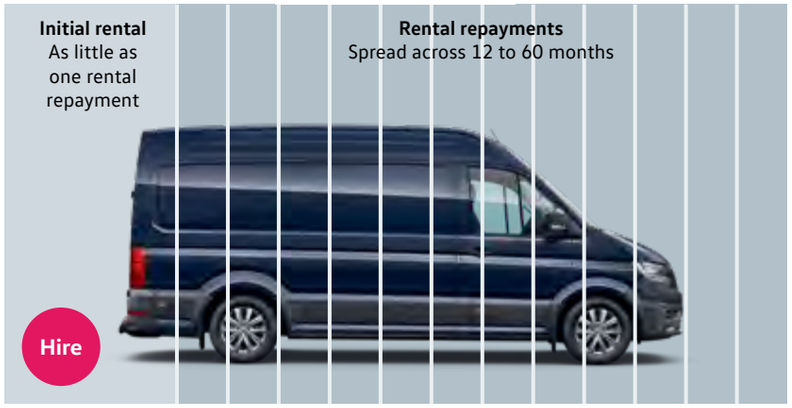

Contract Hire

Pay fixed monthly rentals to hire the vehicle. Look after it so at the end you can return it hassle free.

Cost of your vehicle

Finance Lease (full pay out)

Pay monthly rentals to hire the vehicle. At the end you have two options. Sell the vehicle and receive a percentage of the sale proceeds. Or retain the use of your vehicle by paying a reduced annual rental.

Cost of your vehicle

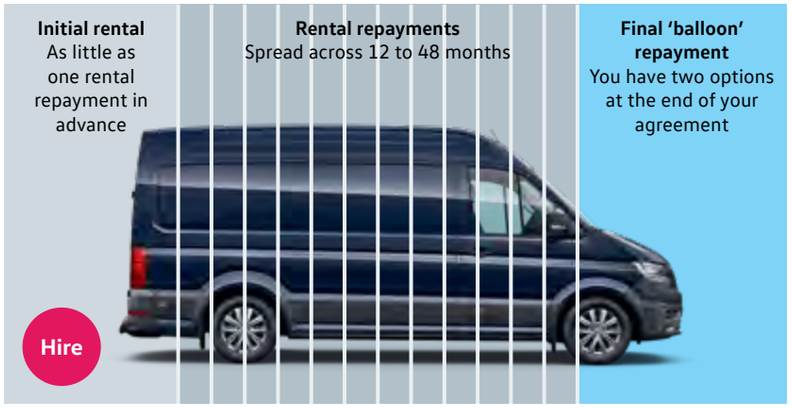

Finance Lease (balloon repayment)

Pay monthly rentals to hire the vehicle. At the end you have two options. Sell the vehicle to settle the outstanding amount and receive any excess sale proceeds. Or pay the 'balloon' payment and retain the use of your vehicle by paying a reduced annual rental.

Illustrations include options at extra charge.
Please contact your local Volkswagen Commercial Vehicles Van Centre for details of the standard equipment and optional extras applicable in your country.

Finance subject to status. Available to 18s and over in the UK only. Terms and Conditions apply. Volkswagen Commercial Vehicle Financial Services.

Finance, insurance, servicing and warranties

Finance[1] and insurance.[3]
When it comes to paying for your van, we've got options including Contract Hire and Finance Lease, or Hire Purchase. We can also offer you insurance products with lots of features and benefits included as standard.

A choice of packages.[2]
Whether you prefer to lease your vehicles, with none of the concerns of ownership and the freedom to change models easily, or purchase outright to own the vehicle that's perfect for your business, we're here to help you consider your options.

You can go flexible, by choosing a payment plan that suits your finances, with options to reduce your monthly costs and your repayment period. Or choose a fixed monthly price that allows you to budget confidently for the longer term.

You can even include your road tax and servicing costs to arrive at one simple, all-inclusive payment. For more information, pick up a finance brochure, or ask at your Van Centre.

Volkswagen Commercial Vehicle Van Insurance.[3]
Annual Insurance
Comprehensive van insurance, designed specifically for Volkswagen Commercial Vehicles, to offer you maximum convenience with minimum hassle – just as you'd expect.

If you take out a new Volkswagen Commercial Vehicle Van Insurance policy you will receive the following benefits at no additional cost:
- All repairs are carried out by Volkswagen Commercial Vehicles Trained Technicians in Volkswagen Commercial Vehicles Authorised Repairers
- Genuine parts and accessories (excludes windscreen claims)
- Courtesy van while yours is being repaired
- Cover for the full cost of repairs to chips or other small damage to your windscreen
- Up to 90 days' foreign use travel cover, if you're driving in any of the countries listed in your policy booklet
- Up to £250 cover for personal belongings that are lost or damaged following an accident, fire or theft

For more information or to get a quote, call us on: **0345 877 6355**

We're available Monday to Friday 9am-6pm.

Alternatively, visit: **www.insurewithvwcv.co.uk/van-insurance**

Servicing and support.
We're here to keep your business moving, with our range of three award-winning[4] servicing and maintenance options, as well as free Roadside Assistance. Some exclusions apply.
For more detail, please visit: **www.volkswagen-vans.co.uk/aftersales**

Fixed cost maintenance.
This option is available for vehicles that are less than twelve months old and have covered less than 10,000 miles. It makes budgeting easier by splitting the cost of servicing into fixed monthly payments – whether you want Service only; Service and Maintenance; or Service, Maintenance and Tyres.

Service plans.[5]
Designed to keep you on the road, you can plan ahead and cover your next two services with a Service Plan. With the same pricing across all eligible models, we've made paying for your first two services as easy as possible with the option to pay upfront or spread the cost over 24 months.

Pay on demand.
If you're looking for freedom and flexibility with your servicing, it's good to know we're ready when you are. So with our third option, you can choose to pay for your services as and when you need them, with our National Service Pricing. Ask your Van Centre for an up-to-date pricing guide.

Roadside Assistance.
We understand the need to keep you mobile. That's why all new vans come with three-year, unlimited mileage roadside cover. Should the unexpected happen, one call gets you straight through to a team trained to help you through any breakdown or accident. Supporting you every day will be a team of vehicle technicians, fully-trained by Volkswagen and carrying the latest diagnostic equipment, specialist tools and parts.

Assistance benefits include:
- Assistance at home, by the roadside or place of work.
- Recovery to your preferred location.
- Onward travel, for you and your cargo.
- Cover 24 hours a day, 365 days a year.
- Free cover for three years (on new vehicles).
- Unlimited mileage.
- European cover.
- Option to extend cover beyond three years.

Warranties.
You can count on us long after you purchase your new Crafter panel van, thanks to its comprehensive three-year unlimited mileage warranty. You choose Volkswagen because your business depends on it, year in, year out. While your new Crafter panel van is under warranty, we'll fix any defect in manufacture or workmanship free of charge, even if you purchase and service the vehicle at different Van Centres. Some exclusions apply and the vehicle must be cared for using the guidance in your owner's manual.

For more detail, please visit **www.volkswagen-vans.co.uk/aftersales.**

Extended warranty.
You can also extend your warranty beyond the standard warranty period, choosing either Comprehensive or Major Component cover, as a one-off or monthly payment.

For more detail of cover levels, along with terms and conditions, please visit **www.volkswagencvwarranty.co.uk** where you'll also be able to obtain a quote and purchase an extended warranty.

Paint and body warranty.
Your new Crafter panel van's exterior paintwork is covered against manufacturing defects for a period of three years, while its body sections and panels are covered against rusting through from the inside for twelve years. Some exclusions apply and the vehicle must be cared for using the guidance in your owner's manual.

1 Volkswagen Commercial Vehicles Insurance and Volkswagen Commercial Vehicle Financial Services are trading names of Volkswagen Financial Services (UK) Limited, Brunswick Court, Yeomans Drive, Blakelands, Milton Keynes MK14 5LR, which is authorised and regulated by the Financial Conduct Authority (FCA). Registered in England and Wales number: 2835230. Volkswagen Financial Services (UK) Limited financial services register number is 311988.
2 An offer of finance depends on certain conditions. Finance subject to status. Available to 18s and over. Terms and conditions apply. Volkswagen Commercial Vehicle Financial Services.
3 Volkswagen Commercial Vehicle Insurance is arranged by U K Insurance Business Solutions Limited and is underwritten by U K Insurance Limited. Calls may be recorded. Volkswagen Commercial Vehicle Financial Services is a trading name of Volkswagen Financial Services (UK) Limited ("VWFS UK"), registered in England and Wales No.2835230 (registered office: Brunswick Court, Yeomans Drive, Blakelands, Milton Keynes MK14 5LR). Until 31st October 2022 Volkswagen Insurance Service (Great Britain) Ltd operates as an appointed representative of VWFS UK, after this date all references to Volkswagen Insurance Service (Great Britain) Ltd should instead be read as VWFS UK. VWFS UK is authorised and regulated by the Financial Conduct Authority. VWFS UK and U K Insurance Limited are not part of the same corporate group.
4 Business Vans Awards 2014 and 2015: Best Service Package for Van Owners.
5 Covers first two consecutive services for vehicles under 1 year old, limited to 1 x Oil Service, 1 x Oil and Inspection Service and 1 x Pollen Filter.

The Crafter panel van

This brochure supersedes all previous publications.
Issue: 01 April 2026
www.volkswagen-vans.co.uk

Please note: Screen technology does not allow exact reproduction of the paint and upholstery colours. Some of the vehicles shown are European specification and may be fitted with optional equipment or accessories that are available at extra cost, or do not reflect current specification. All data and specifications are in accordance with information available at the time of publication and are subject to change without notice. Vehicles not currently in UK stock and customer order vehicles may take a number of weeks for delivery. Certain combinations of vehicle specifications and factory-fitted options are not compatible and therefore all orders received are subject to confirmation. Models, factory fitted-options and paint and upholstery options are subject to availability. Please check details and availability with an authorised Volkswagen Van Centre at the time of ordering.